



AXIAL FAN

MOON *HI-FI* *BAVARIA*
MOON ONE *HI-FI ONE* *BAVARIA ONE*

EN *USER'S MANUAL*

BLAUBERG

CONTENTS

Delivery set 5
Brief description 5
Operation guidelines 5
Designation key 6
Mounting 7
Electronic system operation algorithm 9
Maintenance 10
Troubleshooting 11
Storage and transportation regulations 11
Manufacturer's warranty 12

This user's manual is a main operating document intended for technical, maintenance, and operating staff.
The manual contains information about purpose, technical details, operating principle, design, and installation of the Moon/Hi-Fi/Bavaria/Moon One/Hi-Fi One/Bavaria One unit and all its modifications.
Technical and maintenance staff must have theoretical and practical training in the field of ventilation systems and should be able to work in accordance with workplace safety rules as well as construction norms and standards applicable in the territory of the country.

READ THE USER'S MANUAL CAREFULLY BEFORE PROCEEDING WITH INSTALLATION WORKS.

COMPLIANCE WITH THE MANUAL REQUIREMENTS ENSURES RELIABLE OPERATION AND LONG SERVICE LIFE OF THE UNIT. KEEP THE USER'S MANUAL AVAILABLE AS LONG AS YOU USE THE UNIT. YOU MAY NEED TO REREAD THE INFORMATION ON THE PRODUCT SERVICING.

This unit is not intended for use by persons (including children) with reduced physical, sensory or mental capabilities, or lack of experience and knowledge, unless they have been given supervision or instruction concerning use of the unit by a person responsible for their safety.
Children should be supervised to ensure that they do not play with the unit.
This appliance can be used by children aged from 8 years and above and persons with reduced physical, sensory or mental capabilities or lack of experience and knowledge if they have been given supervision or instruction concerning use of the appliance in a safe way and understand the hazards involved.
Cleaning and user maintenance shall not be done by children without supervision.
Children shall not play with the appliance.

Connection to the mains must be made through a disconnecting device, which is integrated into the fixed wiring system in accordance with the wiring rules for design of electrical units, and has a contact separation in all poles that allows for full disconnection under overvoltage category III conditions.

Ensure that the unit is switched off from the supply mains before removing the guard.

Precautions must be taken to avoid the back-flow of gases into the room from the open flue of gas or other fuel-burning appliances.

The appliance may adversely affect the safe operation of appliances burning gas or other fuels (including those in other rooms) due to back flow of combustion gases. These gases can potentially result in carbon monoxide poisoning. After installation of the unit the operation of flued gas appliances should be tested by a competent person to ensure that back flow of combustion gases does not occur.

All operations described in this manual must be performed by qualified personnel only, properly trained and qualified to install, make electrical connections and maintain ventilation units.
Do not attempt to install the product, connect it to the mains, or perform maintenance yourself.
This is unsafe and impossible without special knowledge.
Disconnect the power supply prior to any operations with the unit.
All user's manual requirements as well as the provisions of all the applicable local and national construction, electrical, and technical norms and standards must be observed when installing and operating the unit.
Disconnect the unit from the power supply prior to any connection, servicing, maintenance, and repair operations.
Connection of the unit to power mains is allowed by a qualified electrician with a work permit for the electric units up to 1000 V after careful reading of the present user's manual.
Check the unit for any visible damage of the impeller, the casing, and the grille before starting installation. The casing internals must be free of any foreign objects that can damage the impeller blades.
While mounting the unit, avoid compression of the casing! Deformation of the casing may result in motor jam and excessive noise.
Misuse of the unit and any unauthorised modifications are not allowed.
Transported air must not contain any dust or other solid impurities, sticky substances, or fibrous materials.
Do not use the unit in a hazardous or explosive environment containing spirits, gasoline, insecticides, etc.
Do not close or block the intake or extract vents in order to ensure the efficient air flow.
Do not sit on the unit and do not put objects on it.
The information in this user's manual was correct at the time of the document's preparation.
The Company reserves the right to modify the technical characteristics, design, or configuration of its products at any time in order to incorporate the latest technological developments.
Never touch the unit with wet or damp hands.
Never touch the unit when barefoot.
Do not install or use the product until all construction and finishing work has been completed in the room where it is to be installed.
BEFORE INSTALLING ADDITIONAL EXTERNAL DEVICES, READ THE RELEVANT USER MANUALS.



THE PRODUCT MUST BE DISPOSED SEPARATELY AT THE END OF ITS SERVICE LIFE.
DO NOT DISPOSE THE UNIT AS UNSORTED DOMESTIC WASTE.

DELIVERY SET

Fan	- 1 pc.
Screws with dowels	- 4 pcs.
Plastic screwdriver	- 1 pc. (only for the models with a timer)
User's manual	- 1 pc.
Packing box	- 1 pc.
Insulating gasket	- 1 pc.

BRIEF DESCRIPTION

The product is an axial fan for exhaust ventilation of small and medium-sized premises heated in winter. The design of the fan may include a back valve that prevents air from flowing into the room when the fan is off. The fan is designed for connection to ø100/125 mm air duct.

OPERATION GUIDELINES

The fan is rated for connection to single-phase AC power mains.
Power mains parameters are stated on the unit packaging and/or the label on the unit casing.
Ingress protection rating against access to hazardous parts and water ingress is IP44.
The fan is rated for indoor operation at ambient temperatures ranging from +1 °C to +40 °C.
The unit is rated as the Class II (220-240 V, 50 Hz/220 V, 60 Hz) or the Class III (12 V/50 Hz) electrical appliance and requires no grounding.
Power mains parameters are stated on the unit packaging and/or the label on the unit casing.

WARNING! Do not operate the fan outside the specified temperature range.

DESIGNATION KEY

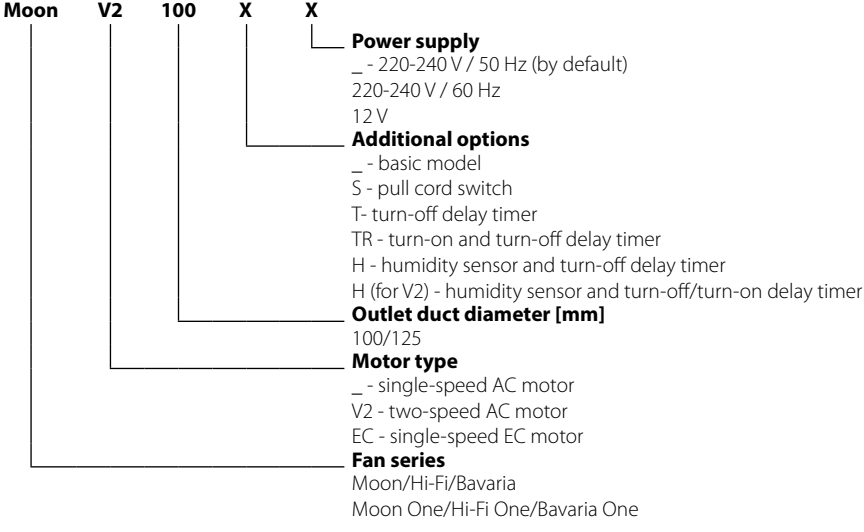

Availability of options depending on the fan model

	S	T	TR	ST	H	SH
Moon/Hi-Fi/Bavaria	+	+	+	+	+	+
Moon One/Hi-Fi One/Bavaria One	+	+	+	–	+	–

MOUNTING

The fan is designed for wall or ceiling mounting and can be used for direct outdoor air exhaust through a round duct or a duct system.
In case of installation through a duct system, select the duct cross section in accordance with the fan size (Fig. 1).
1. When installing the fan with direct air discharge outside through the wall, be sure to install a ventilation grille with louvre shutters or a ventilation hood on the outside to prevent rainfall, snow, leaves, branches, etc. from entering the duct.
To reduce the risk of condensate forming in the duct, the space between the hole in the wall and the duct must be insulated.
Install the air duct with the minimum slope of 1...2° downwards to the outer wall side for condensate removal (Fig 2).
2. The duct system should not exceed 5 meters and have more than two bends.
3. During ceiling installation, vertical air discharge upwards is not allowed even if there is a protective outer hood on the roof.
For ceiling mounting and air discharge to the roof, the duct system must include a condensate drain (Fig. 3).
A condensate drain is not included in the delivery set of the fan and can be ordered separately.
Check the fan for any visible damages of the impeller, the casing and the grille before starting installation. The casing internals must be free of any foreign objects which can damage the impeller blades.
While mounting the unit, avoid compression of the casing!
Deformation of the casing may result in the motor jam and excessive noise.
Mark and drill the fan mounting holes, attach the insulation gasket, and install the fan.
Dowels and screws are designed for concrete and brick walls.
If the walls are made of the other material (drywall, wood,etc.), use the fasteners appropriate for these materials to fasten the fan (not supplied with the fan and must be purchased separately).

WARNING!
When the fan is equipped with a non-return valve, operation of the fan without the valve is prohibited.

The fan mounting sequence is shown in Fig. 4-12.
The fan wiring diagrams are shown in Fig. 13-18.
Terminal designations on wiring diagrams:

L — line
N — neutral
S — timer control line
S1 — external switch
QF — automatic switch

WARNING! The fans rated for 12 V power voltage (stated on the packing box and on the fan casing) connect to ~12 V power mains only!
WARNING! The power cable may only be laid through the hole in the casing provided by the manufacturer (Fig. 9). Laying the power cable through a manually drilled hole will not be the liability of the manufacturer and will void the warranty. The wire must be stripped of insulation by a maximum of 8 mm (Fig. 9).
After installation, pass this user's manual to the end user for reading.

The installation of the product is possible in the zones according to the table below, provided that the installation and connection are performed in accordance with the requirements of IEC 60364-7-701 (in the current version), as well as in accordance with the requirements of the national standards of the country of its installation.
Moon One/Hi-Fi One/Bavaria One models may be installed in Zone 1 of bathrooms where the product cannot be exposed to water jets other than shower spray.

Moon One/Hi-Fi One/Bavaria One	1 2 3
Moon/Hi-Fi/Bavaria	2 3

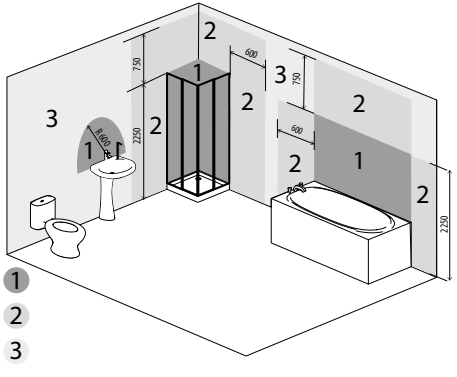

ELECTRONIC SYSTEM OPERATION ALGORITHM

The T model fans equipped with a timer are activated by control voltage application to input terminal **S** by an external switch (e.g. indoor light switch). Upon control voltage removal the fan continues to operate for the period of time set by the timer within the range from 2 to 30 minutes.

Fan with a TR timer. When control voltage is applied to input terminal **S** by the external switch (e.g. indoor light switch), the turn-on delay timer is activated. The fan blades do not rotate. The turn-on delay time is in the range from 0 to 2 minutes. The adjustment range can be selected by means of the potentiometer on the timer circuit board. Upon control voltage removal the fan continues to operate for the period of time set by the turn-off delay timer within the range from 2 to 30 minutes.

The fan with the V2 TR timer runs at Speed 1. When the control voltage is applied to the S input, the turn-on delay timer is activated by the external switch from 0 to 2 minutes, and the fan switches to 2nd speed. You can select the control range using a potentiometer on the timer board. After removing the control voltage, the fan continues to operate for the time specified by the turn-off delay timer, which ranges from 2 to 30 minutes, then switches to Speed 1.

The H model fans equipped with a timer and a humidity sensor are activated by control voltage application to input terminal **S** or on exceeding the pre-set humidity level **H** adjustable within the ~60 % to ~90 % range. Upon control voltage removal or a decrease of humidity level **H** the fan continues to operate for the period of time set by the timer within the range from 2 to 30 minutes.

A V2 H double-speed fan with a timer and humidity sensor is switched to the Speed 2 when the set humidity level in the room (from 60 to 90 %) is exceeded. As the indoor humidity level drops down to the set value, the fan continues to operate for 5 minutes and goes to the Speed 1. The fan can be turned on in manual mode, for example, using a light switch. After turning on the switch, the fan switches to Speed 2 with a time delay of 45 s. After the switch is turned off, the fan will continue to work at the Speed 2 for the time set by the turn-off delay timer, from 2 to 30 minutes, then it will switch to the Speed 1.To set the maximum level of humidity, it is necessary to set the potentiometer regulator to the **H** max position (90 %).



THE TIMER BOARD IS UNDER MAINS VOLTAGE.
MAKE SURE THE FAN IS COMPLETELY DISCONNECTED FROM THE POWER MAINS BEFORE ADJUSTING

T_{on} — To adjust the fan activation delay time, turn the **T_{on}** potentiometer knob clockwise (+) or counter-clockwise (-) which sets the activation delay time within the range from 0 to 2 minutes.

T_{off} — To adjust the fan deactivation delay time, turn the **T_{off}** potentiometer knob clockwise (+) or counter-clockwise (-) which sets the activation delay time within the range from 2 to 30 minutes.

H — To adjust the humidity sensor threshold value turn the **H** potentiometer knob clockwise (+) or counter-clockwise (-) which sets the threshold value within the range from 60 % to 90 %.

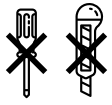

DO NOT USE A METAL SCREWDRIVER, KNIFE, ETC. FOR ADJUSTMENT OPERATIONS NOT TO DAMAGE THE CIRCUIT BOARD

The fan is supplied with a special plastic screwdriver. Use the screwdriver to adjust the fan activation or deactivation delay time or the humidity sensor threshold value.

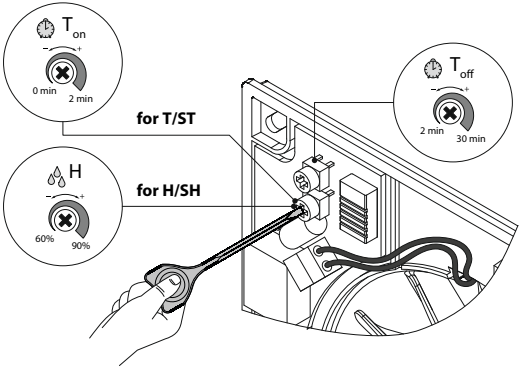

MAINTENANCE

To clean the unit from any dust and dirt which may accumulate on the surfaces (Fig. 19-21), use a soft cloth and a brush soaked in a mild detergent solution. Avoid spilling liquid on the electrical components. Wipe the cleaned surfaces dry.

TROUBLESHOOTING

Problem	Possible reasons	Troubleshooting
When the unit is connected to power mains, the fan does not rotate and does not respond to any controls.	No power supply.	Make sure the power supply line is connected correctly, otherwise troubleshoot the connection error.
	Internal connection fault.	Contact the Seller.
Low air flow.	The ventilation system is clogged.	Clean the ventilation system.
Increased noise, vibration.	The impeller is clogged.	Clean the impeller.
	The fan is not secured well or is not mounted properly.	Troubleshoot the installation error.
	The ventilation system is clogged.	Clean the ventilation system.

STORAGE AND TRANSPORTATION REGULATIONS

- Store the unit in the manufacturer's original packaging box in a dry closed ventilated premise with temperature range +5 °C up to + 40 °C and relative humidity up to 70 %.
- Storage environment must not contain aggressive vapors and chemical mixtures provoking corrosion, insulation, and sealing deformation.
- Use suitable hoist machinery for handling and storage operations to prevent possible damage to the unit.
- Follow the handling requirements applicable for the particular type of cargo.
- The unit can be carried in the original packaging by any mode of transport provided proper protection against precipitation and mechanical damage. The unit must be transported only in the working position.
- Avoid sharp blows, scratches, or rough handling during loading and unloading.
- Prior to the initial power-up after transportation at low temperatures, allow the unit to warm up at operating temperature for at least 3-4 hours.

MANUFACTURER'S WARRANTY

The product is in compliance with EU norms and standards on low voltage guidelines and electromagnetic compatibility. We hereby declare that the product complies with the provisions of Electromagnetic Compatibility (EMC) Directive 2014/30/EU of the European Parliament and of the Council, Low Voltage Directive (LVD) 2014/35/EU of the European Parliament and of the Council and CE-marking Council Directive 93/68/EEC. This certificate is issued following test carried out on samples of the product referred to above.
The manufacturer hereby warrants normal operation of the unit for 24 months after the retail sale date provided the user's observance of the transportation, storage, installation, and operation regulations. Should any malfunctions occur in the course of the unit operation through the Manufacturer's fault during the guaranteed period of operation, the user is entitled to get all the faults eliminated by the manufacturer by means of warranty repair at the factory free of charge. The warranty repair includes work specific to elimination of faults in the unit operation to ensure its intended use by the user within the guaranteed period of operation. The faults are eliminated by means of replacement or repair of the unit components or a specific part of such unit component.

The warranty repair does not include:
- routine technical maintenance
- unit installation/dismantling
- unit setup

To benefit from warranty repair, the user must provide the unit, the user's manual with the purchase date stamp, and the payment paperwork certifying the purchase. The unit model must comply with the one stated in the user's manual. Contact the Seller for warranty service.

The manufacturer's warranty does not apply to the following cases:
- User's failure to submit the unit with the entire delivery package as stated in the user's manual including submission with missing component parts previously dismounted by the user.
- Mismatch of the unit model and the brand name with the information stated on the unit packaging and in the user's manual.
- User's failure to ensure timely technical maintenance of the unit.
- Damage to the unit casing and internal components caused by the user.
- Redesign or engineering changes to the unit.

- Replacement and use of any assemblies, parts and components not approved by the manufacturer.
- Unit misuse.
- Violation of the unit installation regulations by the user.
- Violation of the unit control regulations by the user.
- Unit connection to power mains with a voltage different from the one stated in the user's manual.
- Unit breakdown due to voltage surges in power mains.
- Discretionary repair of the unit by the user.
- Unit repair by any persons without the manufacturer's authorization.
- Expiration of the unit warranty period.
- Violation of the unit transportation regulations by the user.
- Violation of the unit storage regulations by the user.
- Wrongful actions against the unit committed by third parties.
- Unit breakdown due to circumstances of insuperable force (fire, flood, earthquake, war, hostilities of any kind, blockades).
- Missing seals if provided by the user's manual.
- Failure to submit the user's manual with the unit purchase date stamp.
- Missing payment paperwork certifying the unit purchase.



FOLLOWING THE REGULATIONS STIPULATED HEREIN WILL ENSURE A LONG AND TROUBLE-FREE OPERATION OF THE UNIT



USER'S WARRANTY CLAIMS SHALL BE SUBJECT TO REVIEW ONLY UPON PRESENTATION OF THE UNIT, THE PAYMENT DOCUMENT AND THE USER'S MANUAL WITH THE PURCHASE DATE STAMP

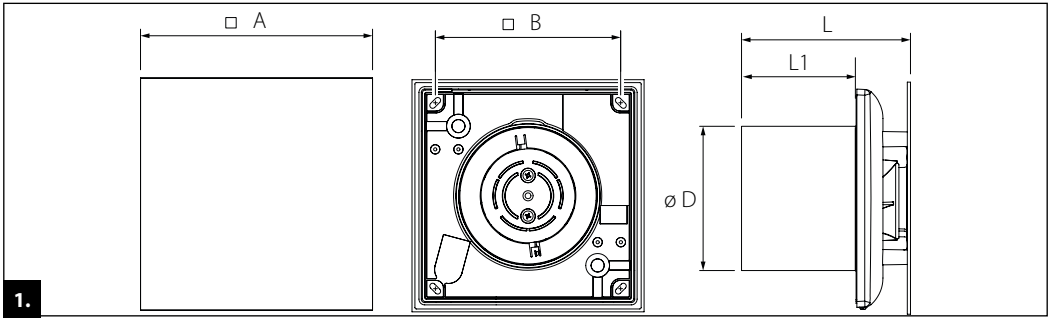

1.

	D, mm	A, mm	B, mm	L, mm	L1, mm
Moon 100 (One)	99	180	128	123	79
Hi-Fi 100 (One)	99	180	128	120	79
Bavaria 100 (One)	99	180	128	120	79
Moon 125	123.5	180	158	130	85
Hi-Fi 125	123.5	180	158	126	85
Bavaria 125	123.5	180	158	127	85

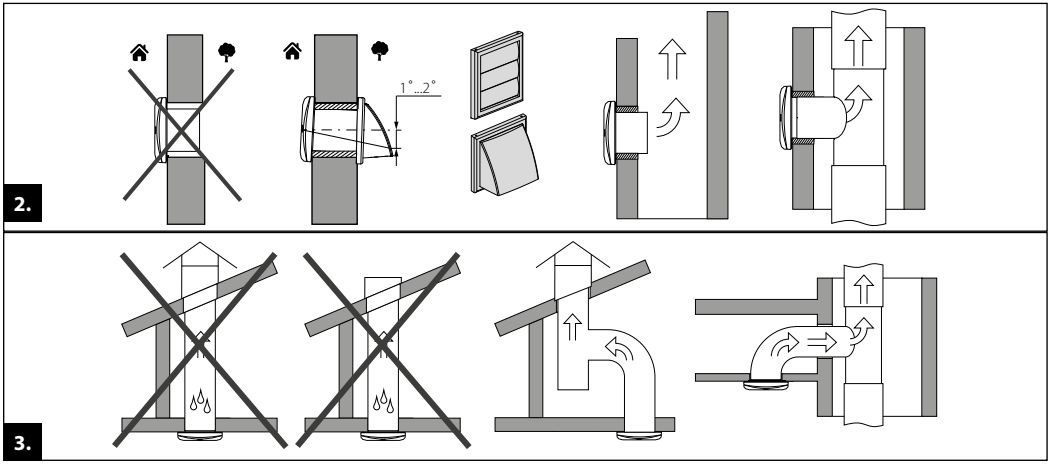
2.
1°...2°
3.

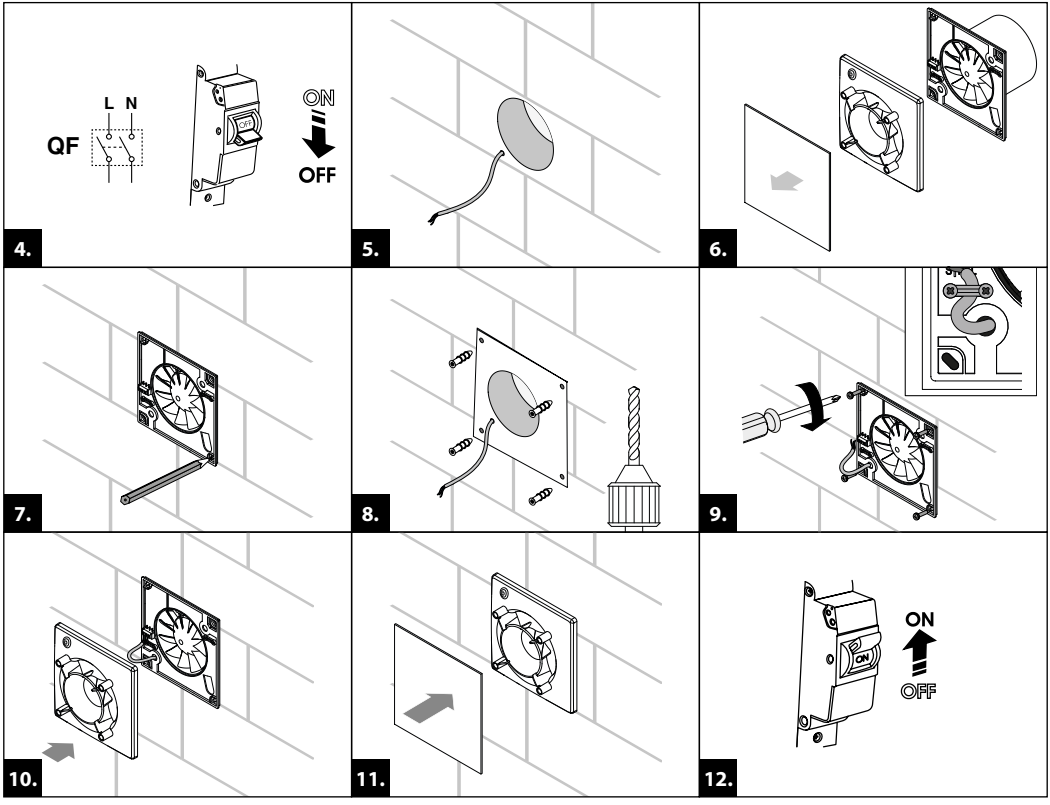
L N
QF
ON
OFF
4.
5.
6.
7.
8.
9.
10.
11.
ON
OFF
12.

... 100/125

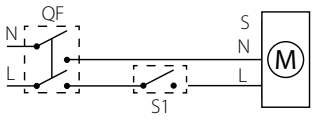

... 100/125 T

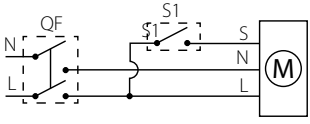

... 100/125 S(T)

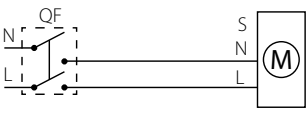

... 100/125 T(ST)

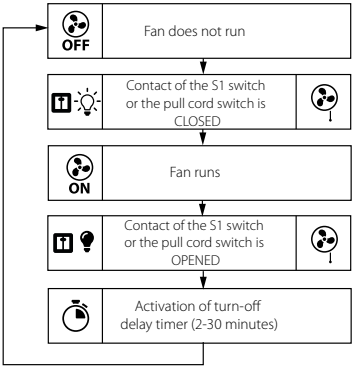

... 100/125 TR

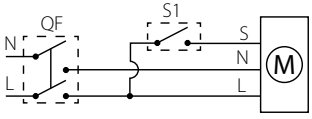

... 100/125 STR

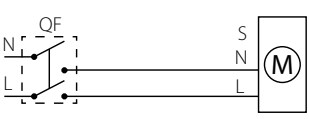

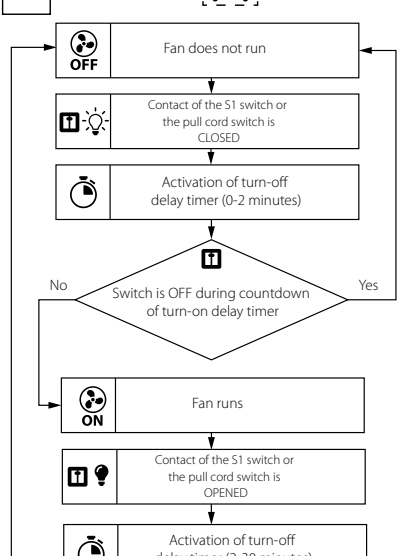

14.

15.

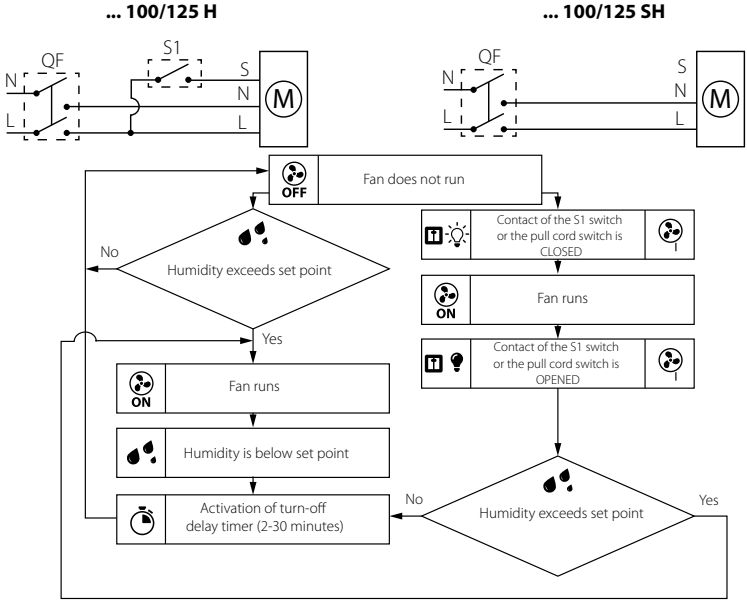
... 100/125 H
... 100/125 SH
QF
S1
N
L
S
N
L
M
OFF
Fan does not run
No
Humidity exceeds set point
Yes
ON
Fan runs
Humidity is below set point
Activation of turn-off delay timer (2-30 minutes)
Contact of the S1 switch or the pull cord switch is CLOSED
Fan runs
Contact of the S1 switch or the pull cord switch is OPENED
No
Humidity exceeds set point
Yes

... V2 100/125

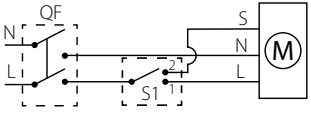

speed 1 and 2

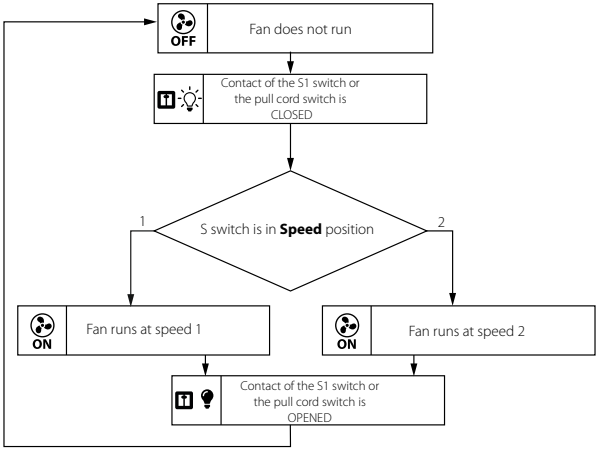

16.

... V2 100/125 TR

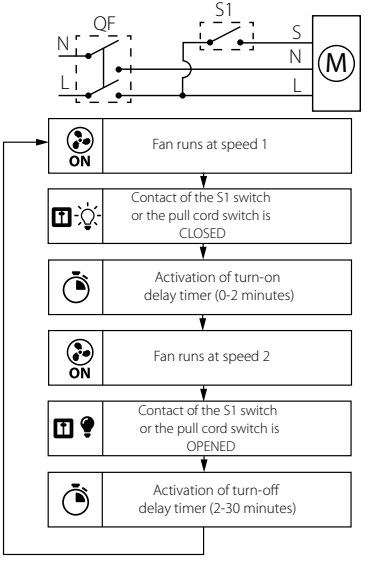

17.

... V2 100/125 H

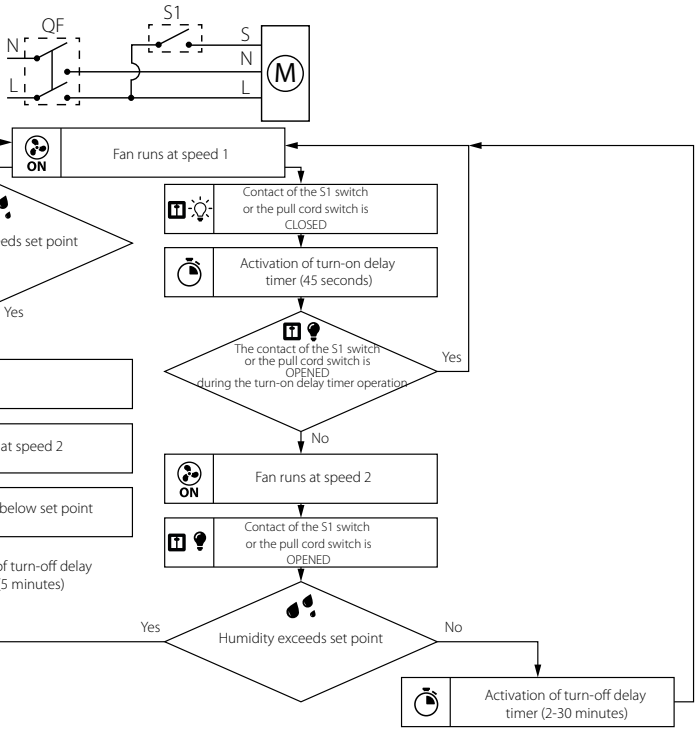

18.

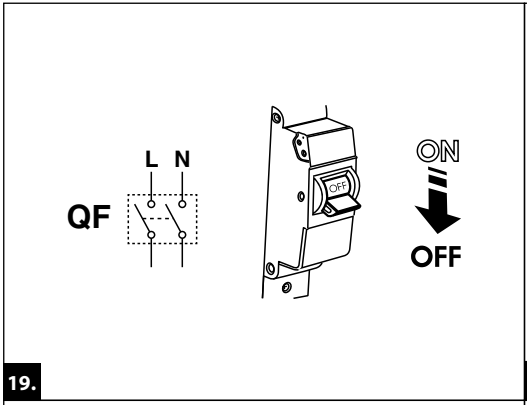

19.

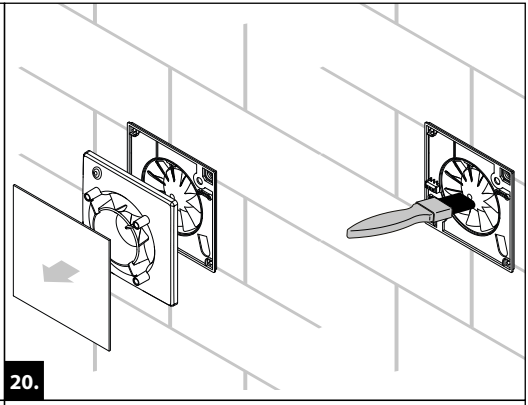

20.

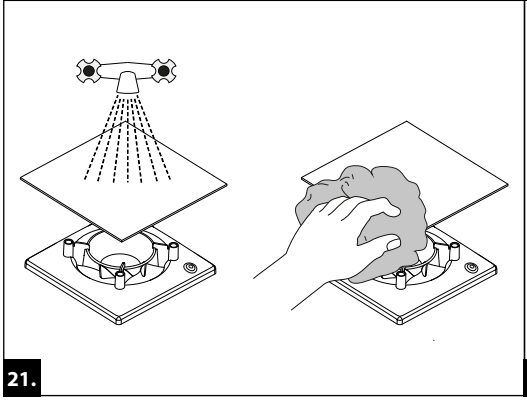

21.

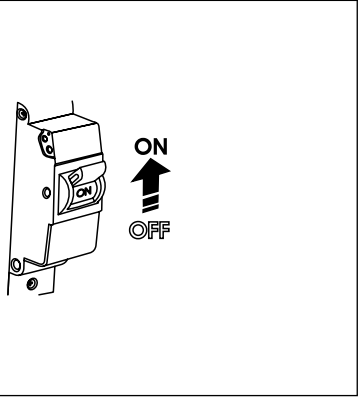

22.

Quality Inspector's Stamp _____

Seller _____
(name and stamp of the seller)

_____

Purchase Date _____

Manufacturer: Ventilation Systems LLC,
Ukraine, Kyiv, 1 M. Kotsyubynskoho Street
Address of production facilities:
Ukraine, Kyiv Region, Fastiv District, Boyarka,
36 Sobornosti Street

BLAUBERG

www.blaubergventilatoren.net
B160EN-08