

Aero Still Chrome 150

Extract fan for low-noise applications

- Backdraft protection: Backdraft damper

	Unit of measurement	Aero Still Chrome 150
Minimum supply voltage	V	220
Maximum supply voltage	V	240
Power supply frequency	Hz	50
Maximum airflow	m^3/h	254
Ingress protection rating	-	IP34
Impeller material	-	Plastic

Dimensions

a	b	c	Ø d	e
198	170	119	150	30

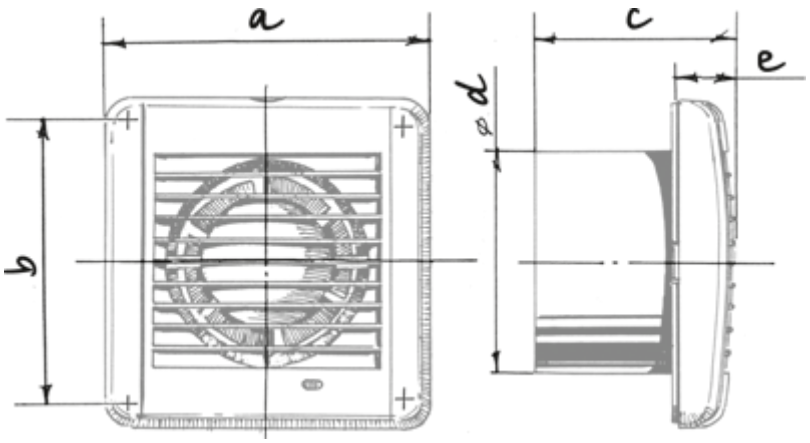
a
b
c
e
d
ø