

Axis-Q 550 4D

Wall-mounted axial fans

- Impeller type: Axial
- Casing material: Coated steel
- Installation in any position

	Unit of measurement	Axis-Q 550 4D
Phases	-	3
Maximum supply voltage	V	400
Minimum supply voltage	V	400
Power supply frequency	Hz	50
Maximum airflow	m³/h	9700
Weight	kg	16.5
Transported air temperature (max)	°C	60
Transported air temperature (min)	°C	-30
Ingress protection rating	-	IP24
Ingress protection rating of the drive	-	IP54
Impeller material	-	Coated steel

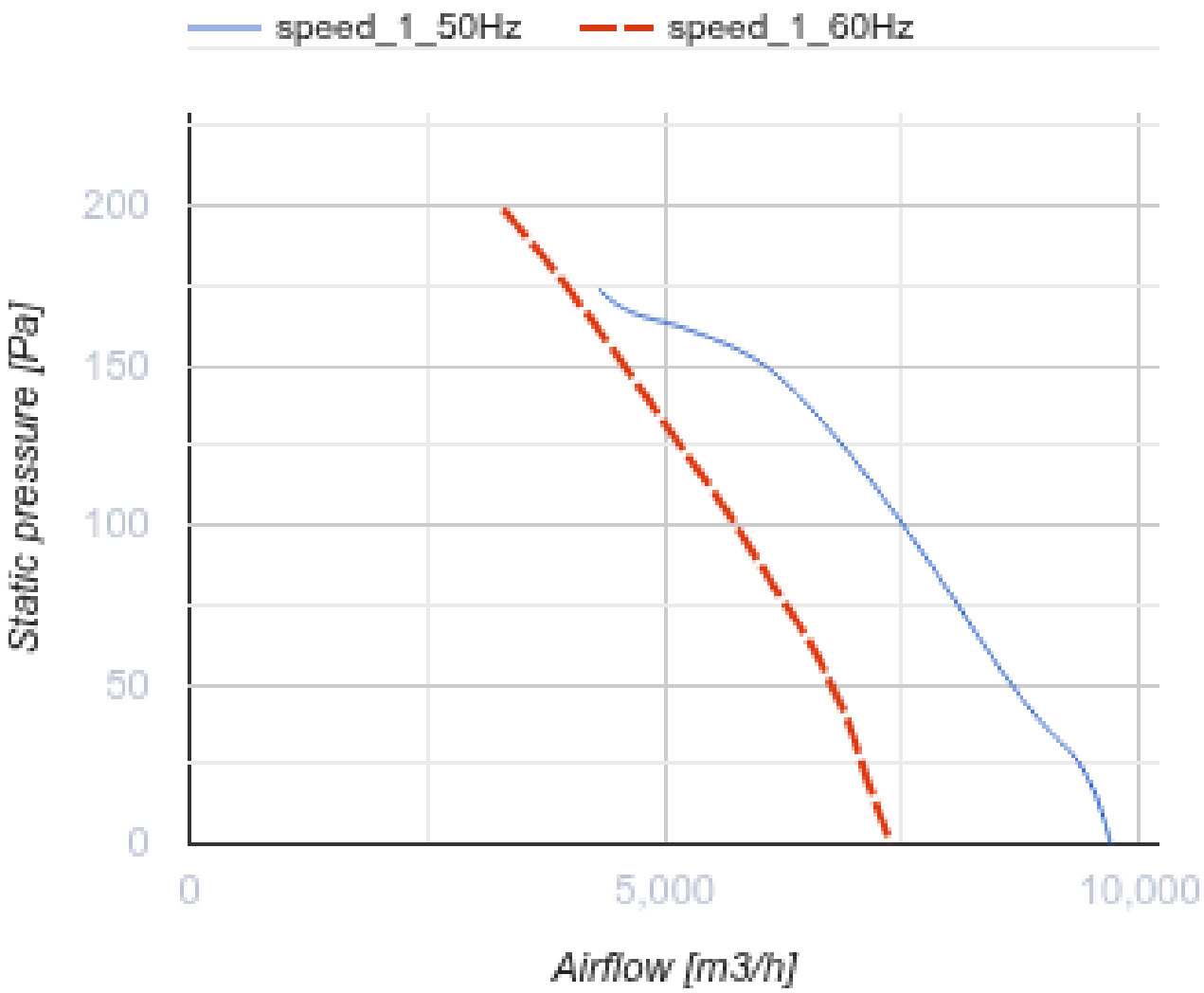
speed_1_50Hz
speed_1_60Hz
200
150
100
50
0
Static pressure [Pa]
0
5,000
10,000
Airflow [m3/h]

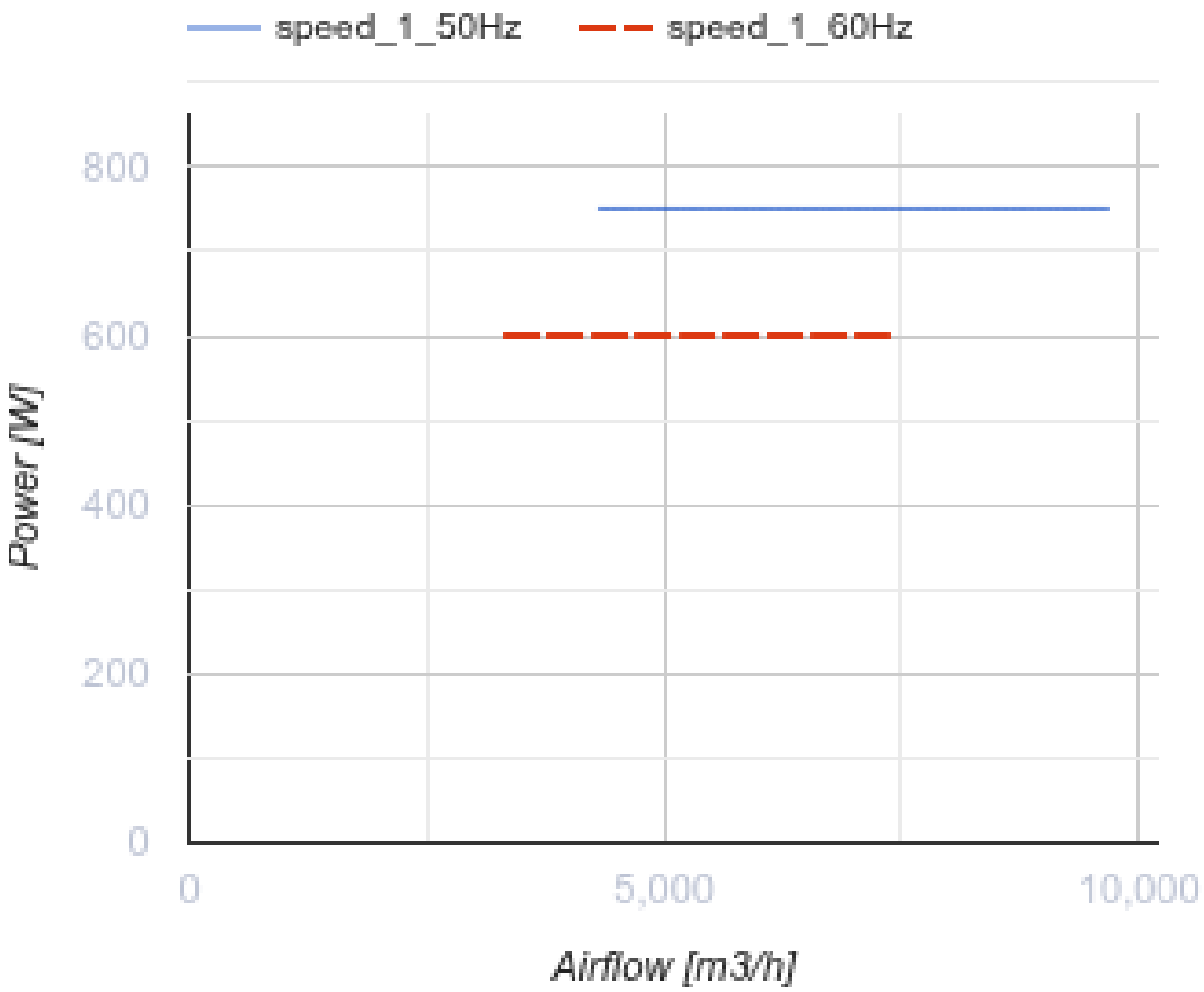

Dimensions

ØD	Ød	B	B1	L
570	11	725	675	260

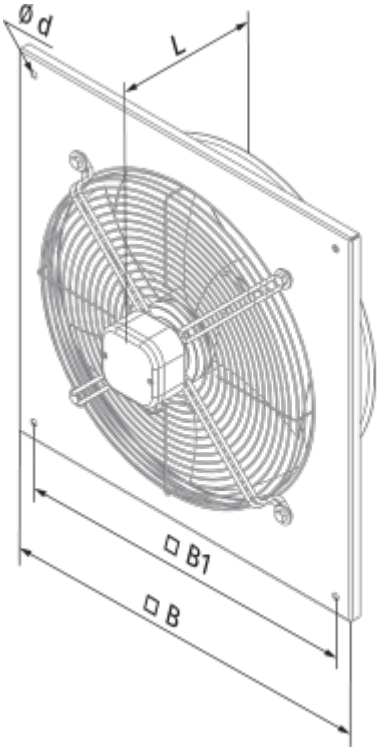
Ø d
L
□ B1
□ B

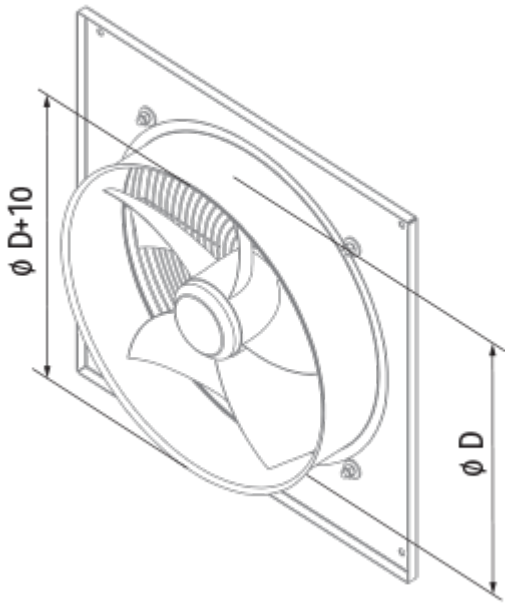
ø D+10
ø D

Ecodesign

Trademark	Blauberg
Model	Axis-Q 550 4D
Type of drive installed	External MSD or VSD
Type of heat recovery system	None
Nominal external pressure (Pa)	140
Maximum external leakage rates (%)	2.7
Static efficiency (%)	38.7
Sound power level (dB(A))	93
Effective electric power input (kW)	0.656
Declared typology	NRVU UVU