

FQM 250

Spigot with a plate for round ducts

- Casing material: Coated steel

	Unit of measurement	FQM 250

Dimensions

Ø D	a	b	L
250	300 × 300	284 × 284	50

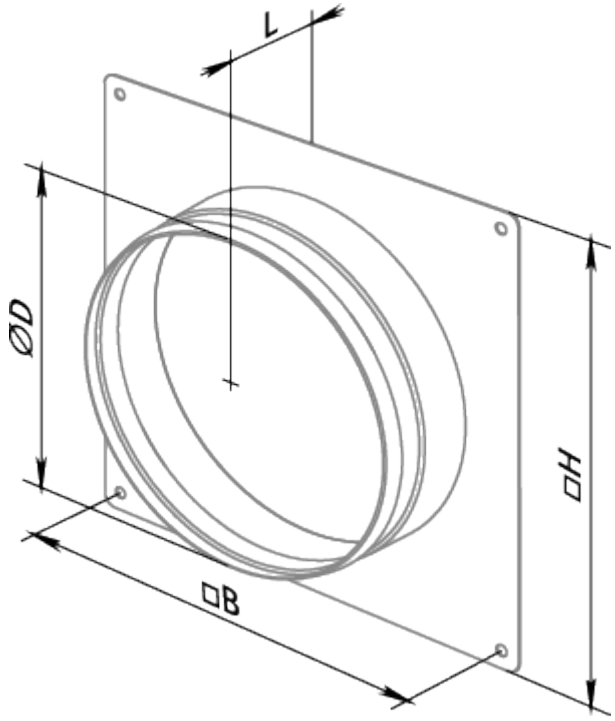
L
ØD
□H
□B