

Freshbox 100 WiFi

Single-room air handling units

- Heat exchanger type: Counter flow
- Heat exchanger material: Polystyrene
- Sound-insulated casing
- Control: Built-in control panel, Smartphone
- Casing material: Coated steel
- Temperature sensor: Built-in

	Unit of measurement	Freshbox 100 WiFi				
Phases	-	1				
Minimum supply voltage	V	110				
Maximum supply voltage	V	240				
Power supply frequency	Hz	50/60				
Maximum airflow	m³/h	30	44	60	75	100
Heat recovery efficiency	%	98	95	92	90	89
Heat exchanger type	-	Counter flow				
Heat exchanger material	-	Polystyrene				
Weight	kg	31				
Transported air temperature (max)	°C	40				
Transported air temperature (min)	°C	-20				
Ambient air temperature min	°C	1				
Ambient air temperature max	°C	40				
Ingress protection rating	-	IP22				
Ambient air humidity max	%	70				
Ingress protection rating of the drive	-	IP44				
Minimum wall thickness	mm	50				
Maximum wall thickness	mm	2000				

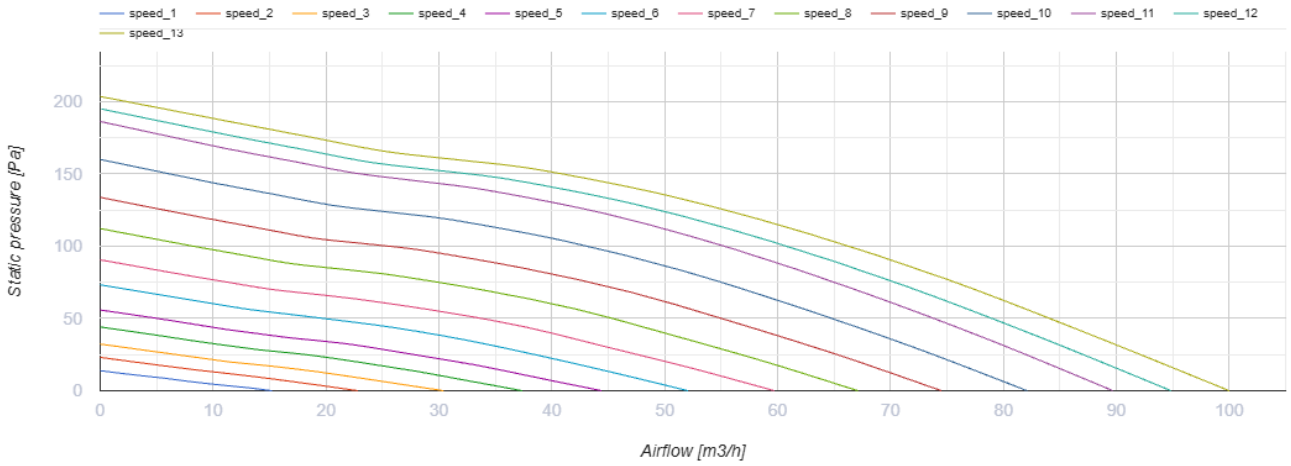

Dimensions

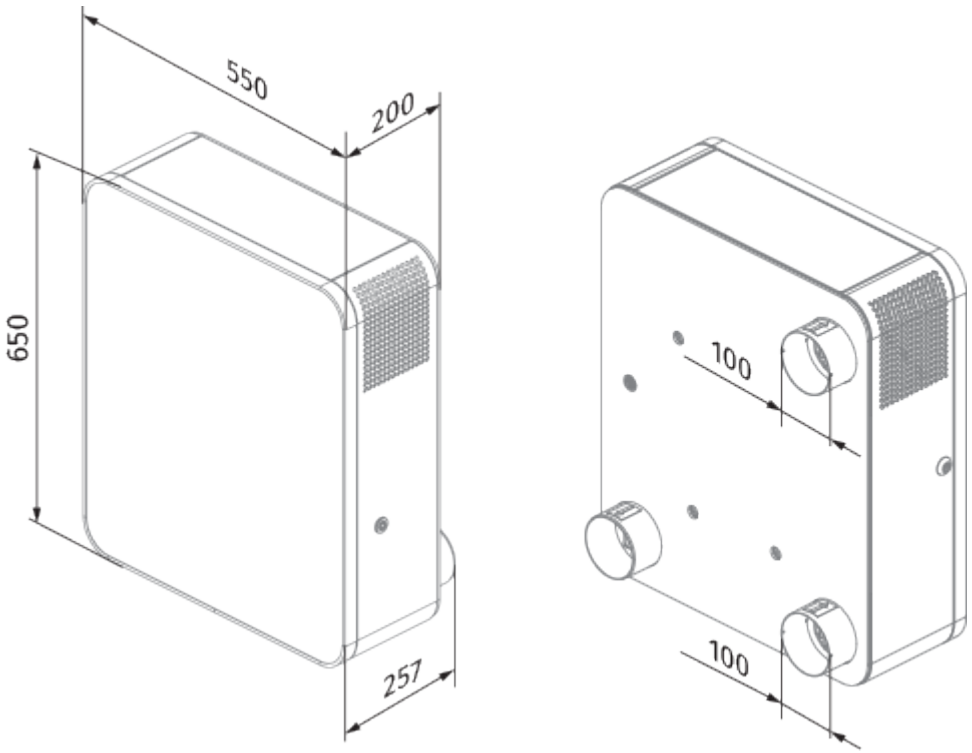

Accessories

CO2 sensors

Name	Photo	Description
CD-1		CO2 sensors

CD-2		CO2 sensors

Other accessories

Name	Photo	Description
MS Freshbox 100 chrome		
MS Freshbox 100 white	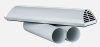	
EH Freshbox 100		Electric heater
FP 193x158x47 F8		F8 filter
FP 193x158x47 F8 C		F8 carbon filter
FP 193x158x18 G4 PPI		G4 panel filter
FP 193x158x47 H13		Supply HEPA H13 panel filter

Hoods

Name	Photo	Description
AH Freshbox 100 chrome		
AH Freshbox 100 white		

Humidity sensors

Name	Photo	Description
HR-S		Electro-mechanical humidistat