

Iso Box-F 150 G4/H13 L

Centrifugal inline fans with forward curved blades in sound-insulated casings with filters

- Sound-insulated casing
- Impeller type: Centrifugal impeller with backward curved blades
- Casing material: Coated steel
- Installation in any position

	Unit of measurement	Iso Box-F 150 G4/H13 L
Phases	-	1
Maximum supply voltage	V	230
Minimum supply voltage	V	230
Power supply frequency	Hz	50
Maximum airflow	m³/h	360
Transported air temperature (max)	°C	40
Transported air temperature (min)	°C	-25
Ingress protection rating	-	IPX4
Ingress protection rating of the drive	-	IP44
Impeller material	-	Plastic

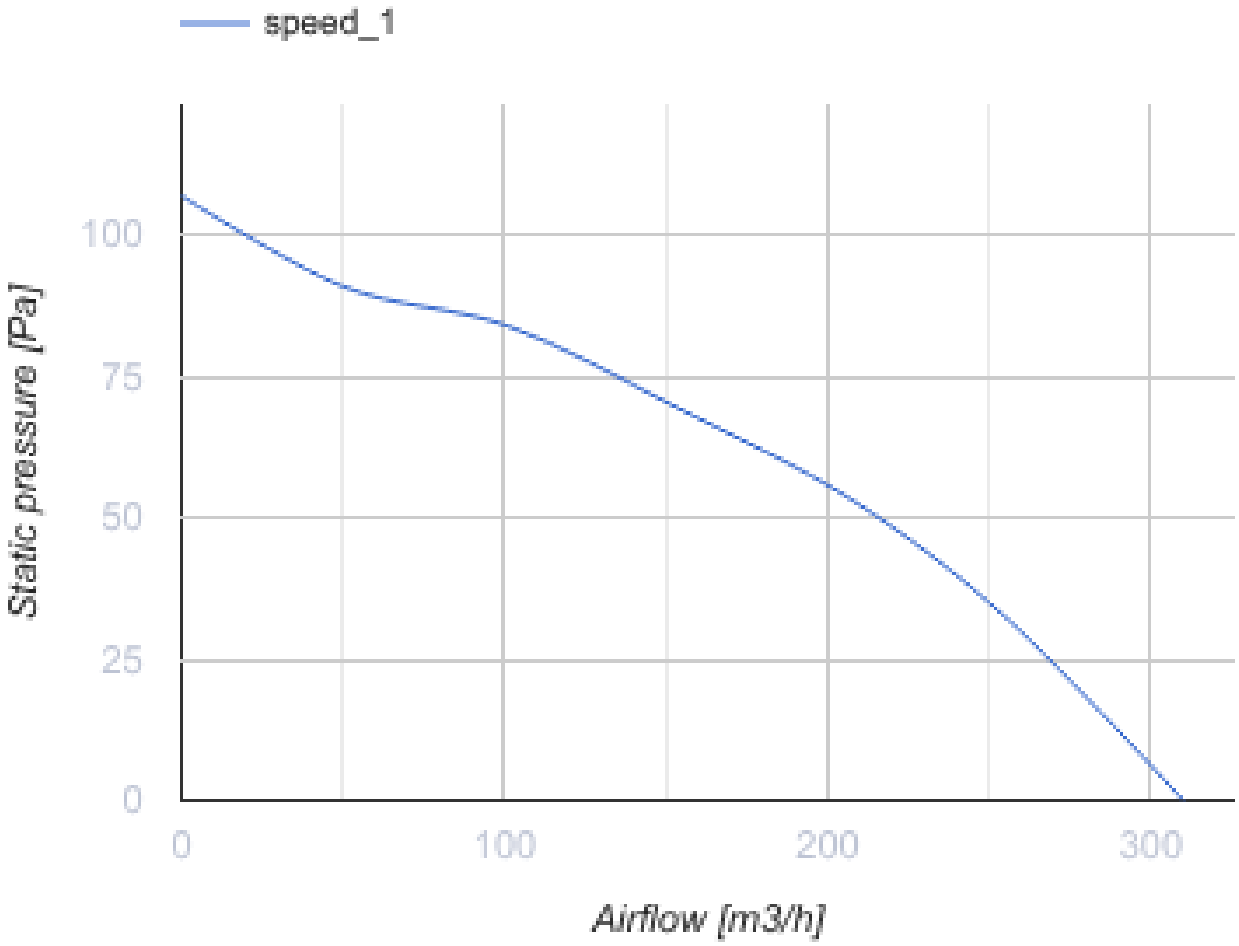

Dimensions

Ø D	L	H	B	L1	B1	L2	B2
150	705	250	415	805	508	650	458

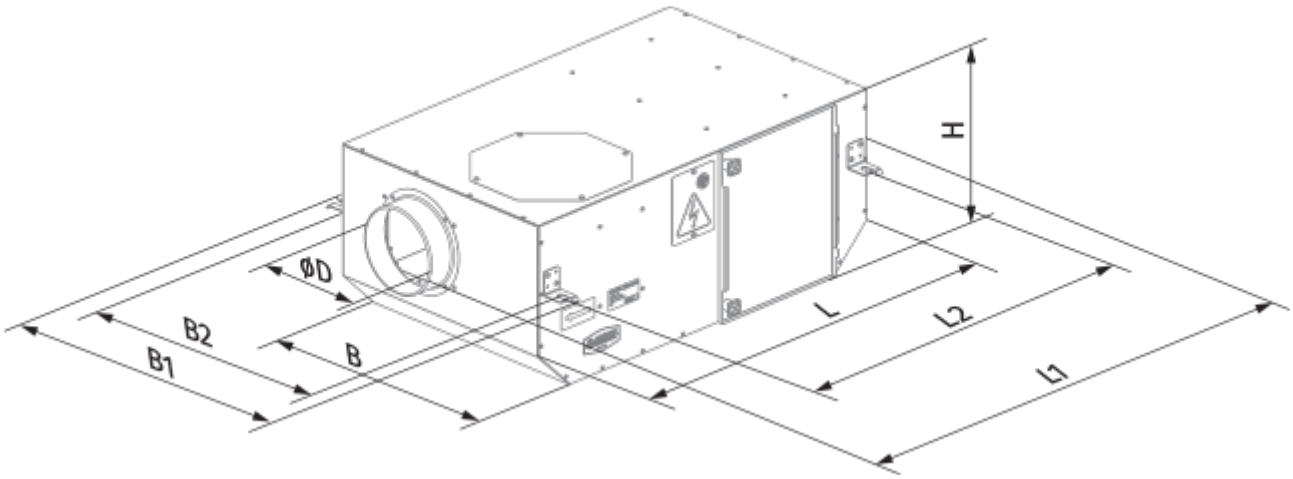
H
ØD
B2
B1
B
L
L2
L1

Ecodesign

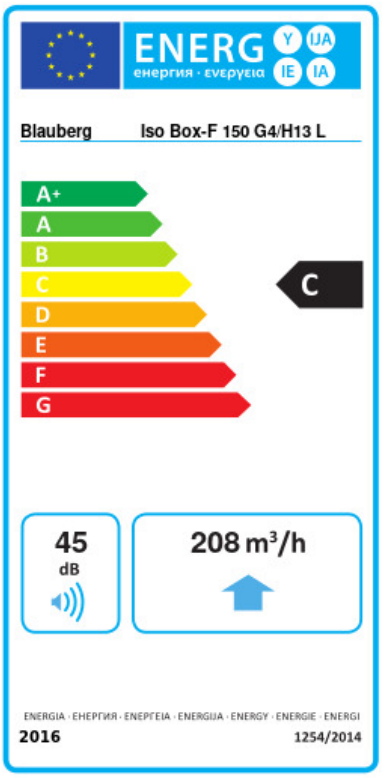

Trademark	Blauberg					
Model	Iso Box-F 150 G4/H13 L					
Specific energy consumption (SEC) (kWh/(m²/a))	Cold		Average		Warm	
	-51.9	A+	-24.9	C	-9.4	F
Type of ventilation unit	Unidirectional					
Type of drive installed	Multi-speed					
Type of heat recovery system	None					
Maximum flow rate (m³/h)	208					
Electric power input (W)	54					
Reference flow rate (m³/s)	0.04					
Reference pressure difference (Pa)	50					
Specific power input (SPI) (W/(m³/h))	0.26					
Control typology	Local demand control					
Maximum external leakage rates (%)	2.7					
Sound power level (dB(A))	45					
Declared typology	RVU UVU					
The annual electricity consumption (AEC) (kWh/a)	Cold		Average		Warm	
	137		137		137	
The annual heating saved (AHS) (kWh/a)	Cold		Average		Warm	
	5536		2830		1280	