

KOMFORT ERV EC DB 100 L S14

Suspended heat and energy recovery air handling units

- Heat exchanger type: Cross flow
- Heat exchanger material: Enthalpy
- Sound-insulated casing
- Enthalpy heat exchanger
- Bypass: Manual
- Control: Wired control panel
- Casing material: Coated steel
- Humidity sensor: Optional
- CO2 sensor: Optional

	Unit of measurement	KOMFORT ERV EC DB 100 L S14
Phases	-	1
Minimum supply voltage	V	230
Maximum supply voltage	V	230
Power supply frequency	Hz	50/60
Maximum airflow	m³/h	170
Heat recovery efficiency, max	%	82
Heat exchanger type	-	Cross flow
Heat exchanger material	-	Enthalpy
Weight	kg	17
Transported air temperature (max)	°C	40
Transported air temperature (min)	°C	-15
Ambient air temperature min	°C	1
Ambient air temperature max	°C	40
Ingress protection rating	-	IP22
Ambient air humidity max	%	60
Ingress protection rating of the drive	-	IP44

Dimensions

D	B	H	L	L1
100	481	204	600	734

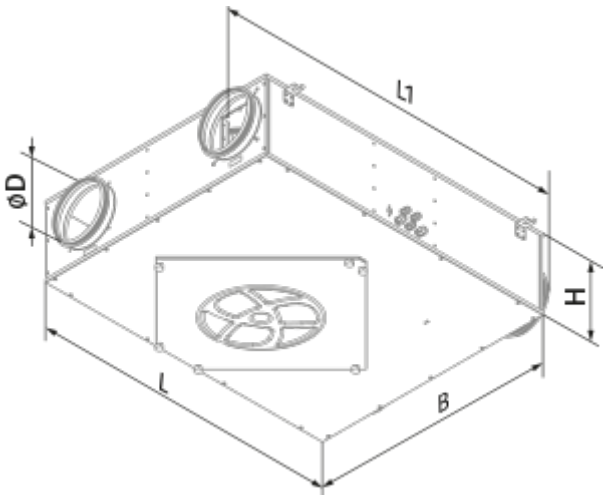

Ecodesign

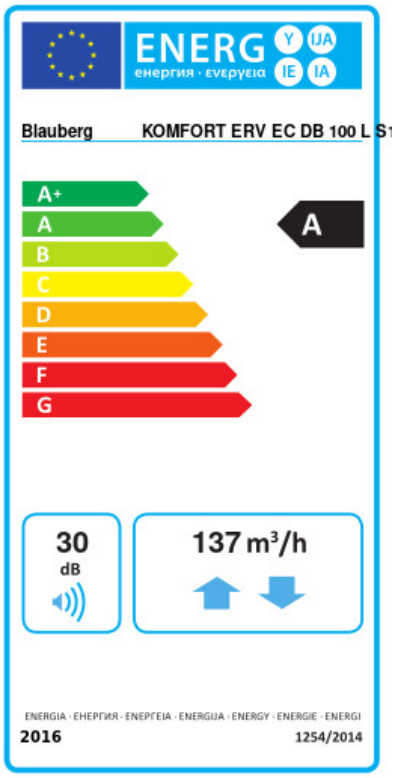

Trademark	Blauberg					
Model	KOMFORT ERV EC DB 100 L S14					
Specific energy consumption (SEC) (kWh/(m²/a))	Cold		Average		Warm	
	-76.7	A+	-40	A	-16.3	E
Type of ventilation unit	Bidirectional					
Type of drive installed	Variable speed					
Type of heat recovery system	Recuperative					
Thermal efficiency of heat recovery (%)	76					
Maximum flow rate (m³/h)	137					
Electric power input (W)	55					
Reference flow rate (m³/s)	0.028					
Reference pressure difference (Pa)	50					
Specific power input (SPI) (W/(m³/h))	0.273					
Control typology	Local demand control					
Maximum internal leakage rates (%)	2.7					
Maximum external leakage rates (%)	2.7					
Declared typology	RVU BVU					
Sound power level (dB(A))	30					
The annual electricity consumption (AEC) (kWh/a)	Cold		Average		Warm	
	726		189		144	
The annual heating saved (AHS) (kWh/a)	Cold		Average		Warm	
	8614		4403		1991	

Accessories

CO2 sensors

Name	Photo	Description
CD-1		CO2 sensors
CD-2		CO2 sensors

Humidity sensors

Name	Photo	Description
FS2		Humidity sensor

Other accessories

Name	Photo	Description
FP 200x191x20 F8		F8 filter
FP 200x191x20 G4		G4 panel filter