

KOMFORT LE 530-4

Heat recovery air handling units

- Power of electrical reheater: 4000
- Heat exchanger type: Cross flow
- Heat exchanger material: Polystyrene
- Sound-insulated casing
- Reheater: Electric
- Control: Wired control panel
- Casing material: Aluzinc steel

	Unit of measurement	KOMFORT LE 530-4
Phases	-	1
Minimum supply voltage	V	230
Maximum supply voltage	V	230
Power supply frequency	Hz	50/60
Power of electrical reheater	W	4000
Maximum airflow	m^3/h	530
Heat recovery efficiency, max	%	88
Heat exchanger type	-	Cross flow
Heat exchanger material	-	Polystyrene
Weight	kg	49
Transported air temperature (max)	°C	40
Transported air temperature (min)	°C	-25
Ambient air temperature min	°C	1
Ambient air temperature max	°C	40
Ingress protection rating	-	IP22
Ambient air humidity max	%	80
Ingress protection rating of the drive	-	IP44

Dimensions

ØD	B	B1	H	H1	L	L1	L2
159	497	403	554	–	954	996	1057

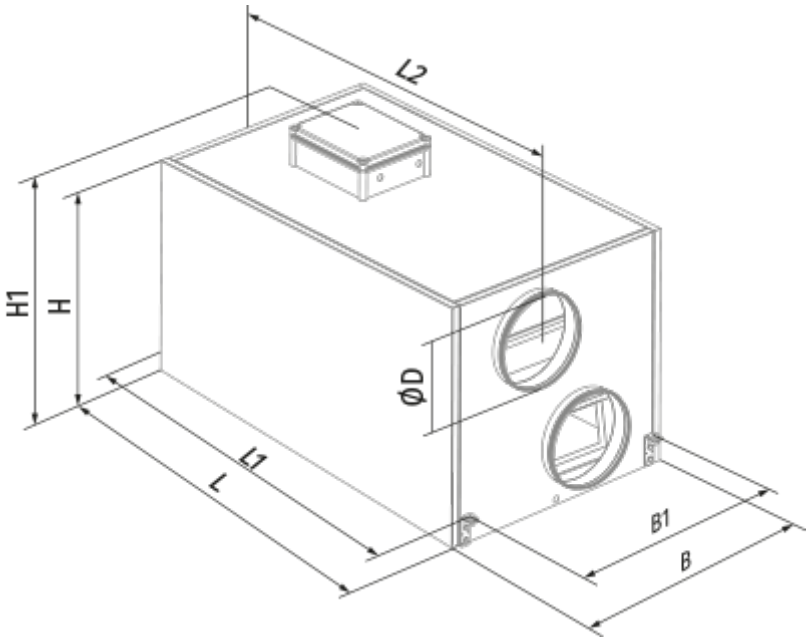

Ecodesign

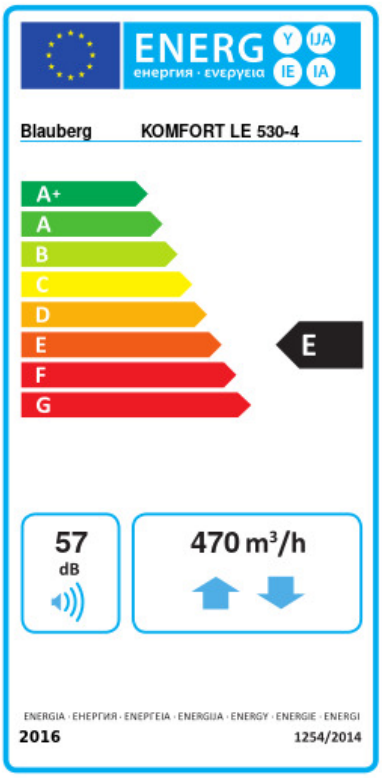

Trademark	Blauberg					
Model	KOMFORT LE 530-4					
Specific energy consumption (SEC) (kWh/(m²/a))	Cold		Average		Warm	
	-48.8	A+	-18.2	E	1.9	G
Type of ventilation unit	Bidirectional					
Type of drive installed	Multi-speed					
Type of heat recovery system	Recuperative					
Thermal efficiency of heat recovery (%)	64					
Maximum flow rate (m³/h)	470					
Electric power input (W)	300					
Reference flow rate (m³/s)	0.091					
Reference pressure difference (Pa)	50					
Specific power input (SPI) (W/(m³/h))	0.602					
Control typology	Manual control					
Maximum internal leakage rates (%)	2.7					
Maximum external leakage rates (%)	2.7					
Declared typology	RVU BVU					
Sound power level (dB(A))	57					
The annual electricity consumption (AEC) (kWh/a)	Cold		Average		Warm	
	1336		799		754	
The annual heating saved (AHS) (kWh/a)	Cold		Average		Warm	
	7343		3754		1697	

Accessories

Other accessories

Name	Photo	Description
FP 438x215x48 G4		G4 panel filter
SB C4 300/300		