

KOMFORT Roto EC D2E 250 R S21

Suspended heat recovery air handling units

- Power of electrical reheater: 700
- Heat exchanger type: Rotary
- Heat exchanger material: Aluminum
- Sound-insulated casing
- Reheater: Electric
- BMS protocol: ModBus
- Control: Smartphone
- Casing material: Coated steel
- Humidity sensor: Optional
- CO2 sensor: Optional
- PM2.5 sensor: Optional

	Unit of measurement	KOMFORT Roto EC D2E 250 R S21
Phases	-	1
Minimum supply voltage	V	230
Maximum supply voltage	V	230
Power supply frequency	Hz	50/60
Power of electrical reheater	W	700
Maximum airflow	m³/h	300
Heat recovery efficiency, max	%	87
Heat exchanger type	-	Rotary
Heat exchanger material	-	Aluminum
Weight	kg	54
Transported air temperature (max)	°C	40
Transported air temperature (min)	°C	-25
Ambient air temperature max	°C	40
Ambient air temperature min	°C	1
Ingress protection rating	-	IP22
Ambient air humidity max	%	80
Ingress protection rating of the drive	-	IP44

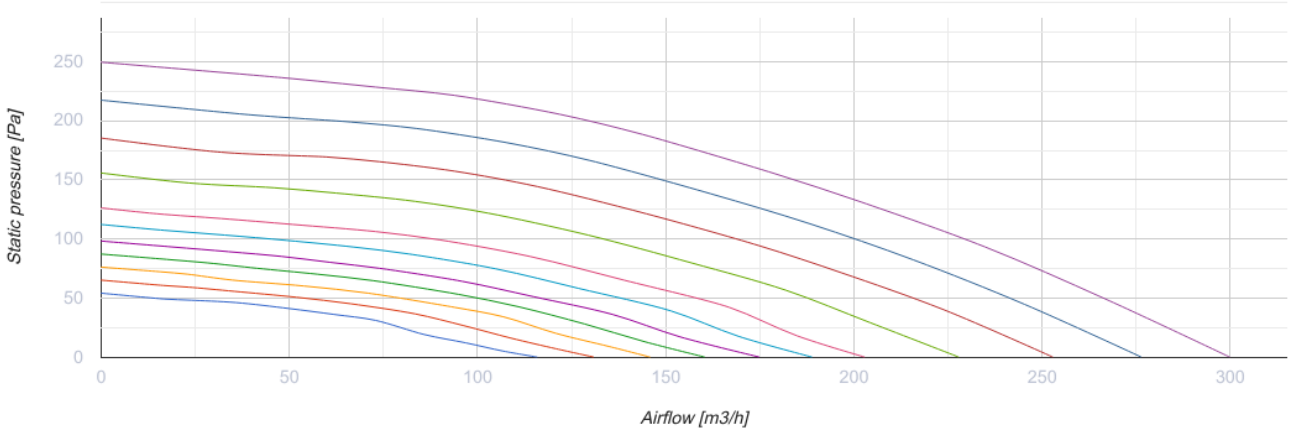

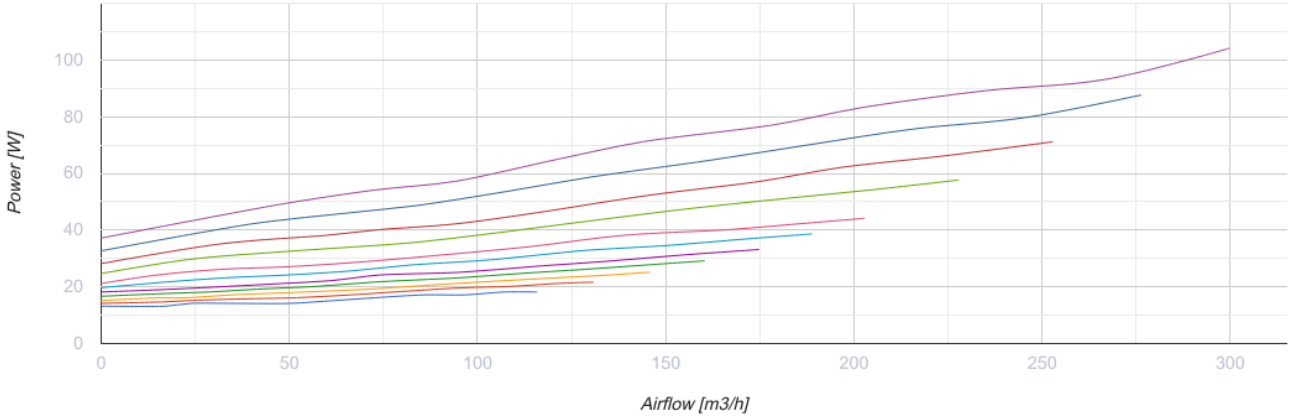

Dimensions

Ø D	Ø D1	B	B1	H	H1	L	L1
160	125	618	666	225	245	1002	1097

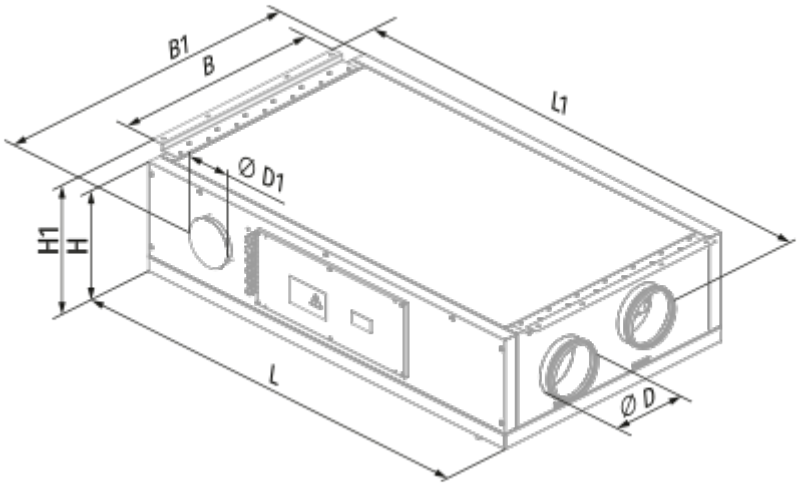

Ecodesign

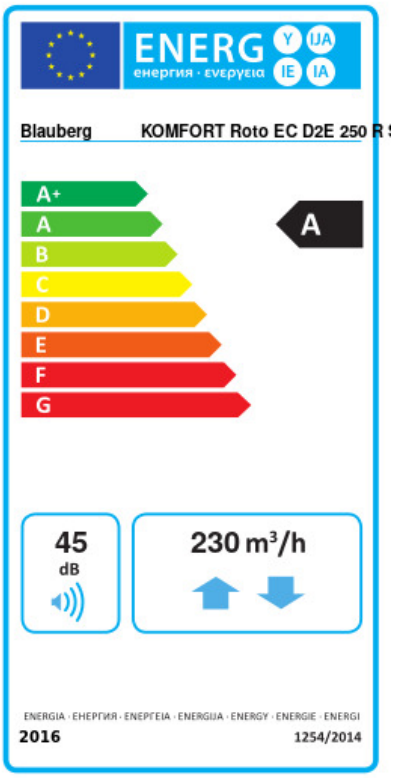

Trademark	Blauberg					
Model	KOMFORT Roto EC D2E 250 R S21					
Specific energy consumption (SEC) (kWh/(m²/a))	Cold		Average		Warm	
	-84.8	A+	-41.7	A	-17	E
Type of ventilation unit	Bidirectional					
Type of drive installed	Variable speed					
Type of heat recovery system	Regenerative					
Thermal efficiency of heat recovery (%)	81					
Maximum flow rate (m³/h)	230					
Electric power input (W)	89					
Reference flow rate (m³/s)	0.044					
Reference pressure difference (Pa)	50					
Specific power input (SPI) (W/(m³/h))	0.256					
Control typology	Local demand control					
Maximum internal leakage rates (%)	2.7					
Maximum external leakage rates (%)	2.7					
Declared typology	RVU BVU					
Sound power level (dB(A))	45					
The annual electricity consumption (AEC) (kWh/a)	Cold		Average		Warm	
	136		136		136	
The annual heating saved (AHS) (kWh/a)	Cold		Average		Warm	
	8817		4507		2038	

Accessories

Cooker Hoods

Name	Photo	Description
DAH 251-13		Kitchen exhaust hood

Control Panels

Name	Photo	Description

S25		LCD control panel
S22		Control panels
S22 Wi-Fi		Control panels

Humidity sensors

Name	Photo	Description
FS2		Humidity sensor

Other accessories

Name	Photo	Description
FP 280x180x48 F7		F7 panel filter
FP 280x180x48 G4		G4 panel filter
FP 280x180x48 H13		Supply HEPA H13 panel filter