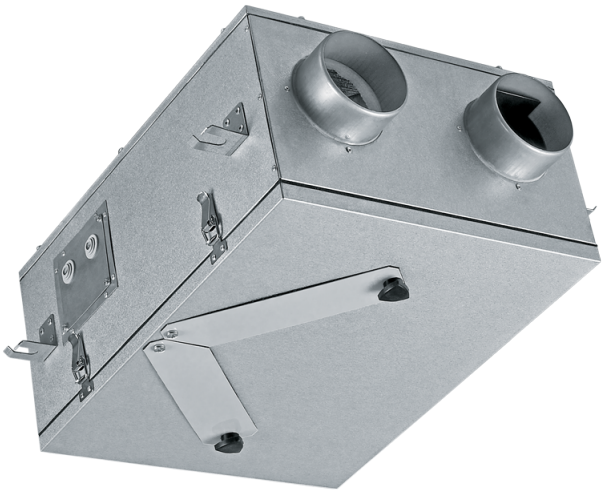

KOMFORT Ultra D 105-A

Single room heat recovery air handling units

- Heat exchanger type: Cross flow
- Heat exchanger material: Polystyrene
- Sound-insulated casing
- Control: Speed switch
- Casing material: Galvanized steel

	Unit of measurement	KOMFORT Ultra D 105-A		
Speed	-	1	2	3
Phases	-	1		
Minimum supply voltage	V	230		
Maximum supply voltage	V	230		
Power supply frequency	Hz	50		
Maximum airflow	m³/h	55	74	100
Heat recovery efficiency, max	%	76		
Heat exchanger type	-	Cross flow		
Heat exchanger material	-	Polystyrene		
Weight	kg	13		
Transported air temperature (max)	°C	40		
Transported air temperature (min)	°C	-25		
Ambient air temperature min	°C	1		
Ambient air temperature max	°C	40		
Ingress protection rating	-	IP22		
Ambient air humidity max	%	60		
Ingress protection rating of the drive	-	IP44		

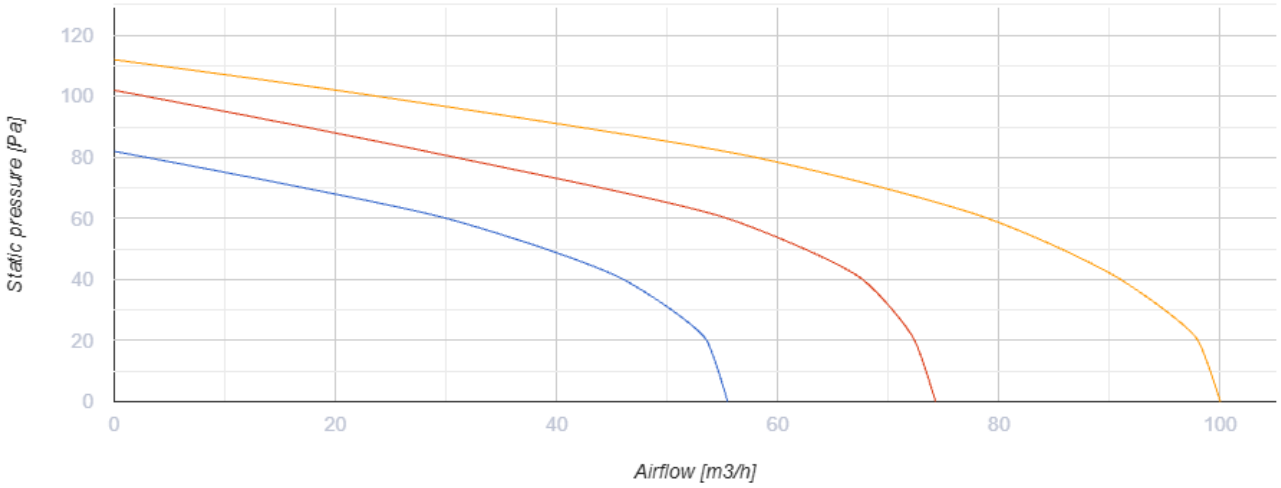

Dimensions

ØD	B	B1	B2	H	L	L1	L2
125	374	404	112.6	224	497	397	595

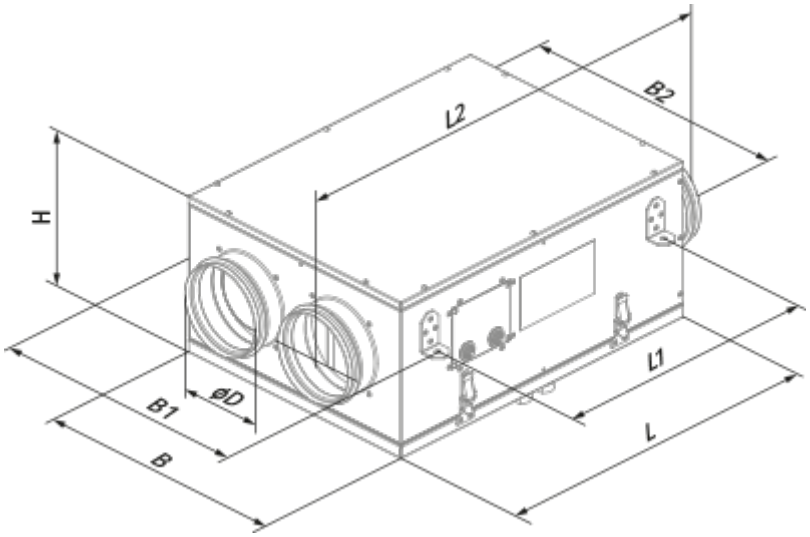

Ecodesign

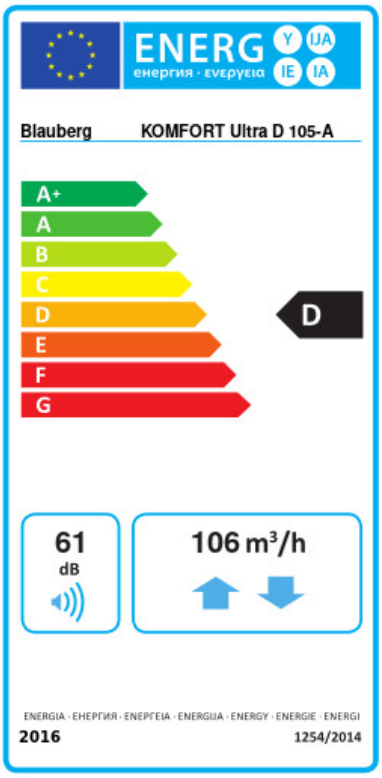

Trademark	Blauberg					
Model	KOMFORT Ultra D 105-A					
Specific energy consumption (SEC) (kWh/(m²/a))	Cold		Average		Warm	
	-54.1	A+	-22.3	D	-1.5	F
Type of ventilation unit	Bidirectional					
Type of drive installed	Multi-speed					
Type of heat recovery system	Recuperative					
Thermal efficiency of heat recovery (%)	68					
Maximum flow rate (m³/h)	106					
Electric power input (W)	56					
Reference flow rate (m³/s)	0.021					
Reference pressure difference (Pa)	50					
Specific power input (SPI) (W/(m³/h))	0.512					
Control typology	Manual control					
Maximum internal leakage rates (%)	2.7					
Maximum external leakage rates (%)	2.7					
Declared typology	RVU BVU					
Sound power level (dB(A))	61					
The annual electricity consumption (AEC) (kWh/a)	Cold		Average		Warm	
	1224		687		642	
The annual heating saved (AHS) (kWh/a)	Cold		Average		Warm	
	7592		3881		1755	

Accessories

Other accessories

Name	Photo	Description
FP 205x198x8 G4		G4 panel filter
SB C4 200/190		