

KOMFORT Ultra EC S2 300-E S14 white

Compact heat recovery air handling units

- Heat exchanger type: Cross flow
- Heat exchanger material: Enthalpy
- Sound-insulated casing
- Enthalpy heat exchanger
- Control: Wired control panel
- Casing material: Double-skinned white painted metal panels

	Unit of measurement	KOMFORT Ultra EC S2 300-E S14 white
Phases	-	1
Minimum supply voltage	V	230
Maximum supply voltage	V	230
Power supply frequency	Hz	50/60
Maximum airflow	m³/h	300
Heat recovery efficiency, max	%	73
Heat exchanger type	-	Cross flow
Heat exchanger material	-	Enthalpy
Weight	kg	28
Transported air temperature (max)	°C	40
Transported air temperature (min)	°C	-25
Ambient air temperature max	°C	40
Ambient air temperature min	°C	1
Ingress protection rating	-	IP22
Ambient air humidity max	%	80
Ingress protection rating of the drive	-	IP44

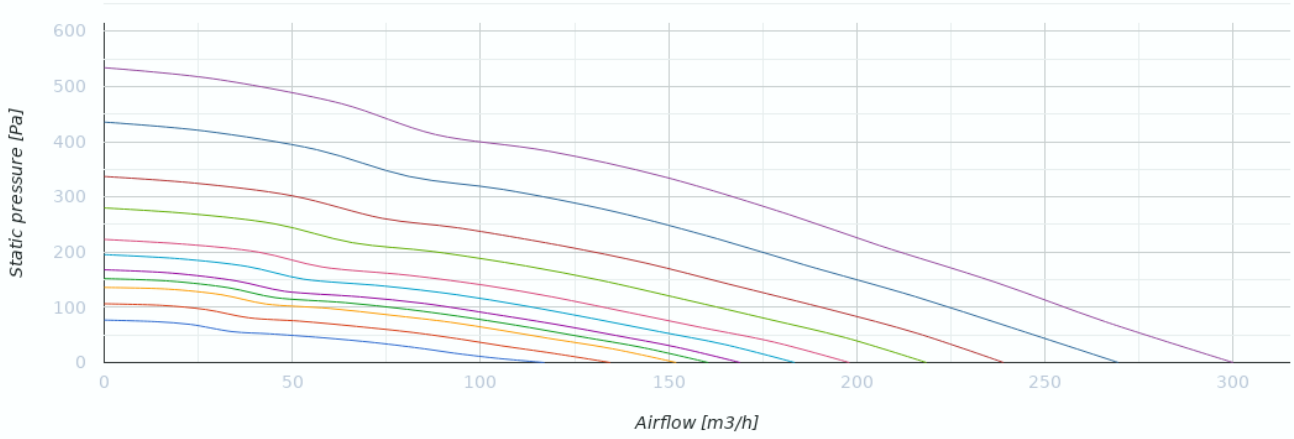

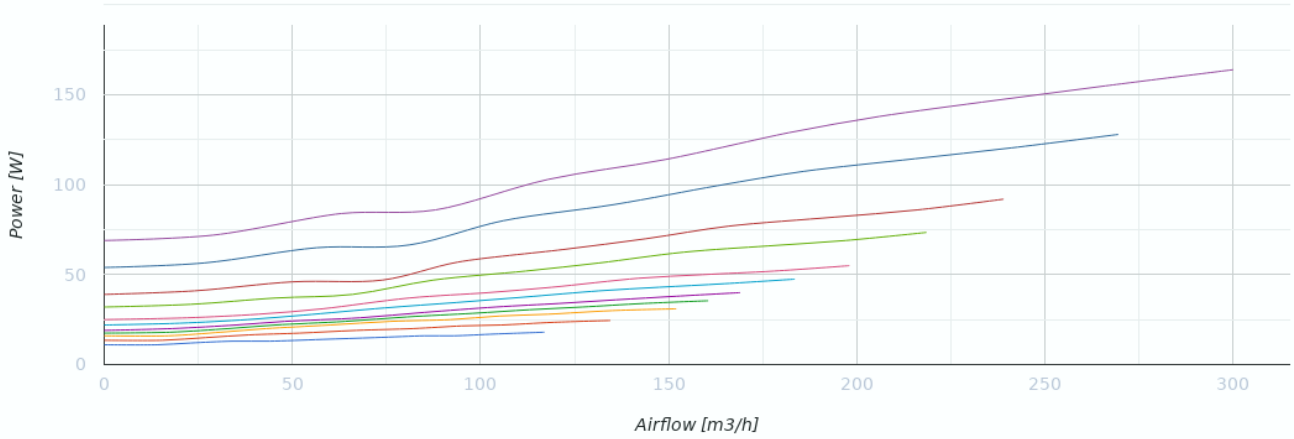

Dimensions

ØD	B	H	H1	L	L1
125	287	447	495	714	776

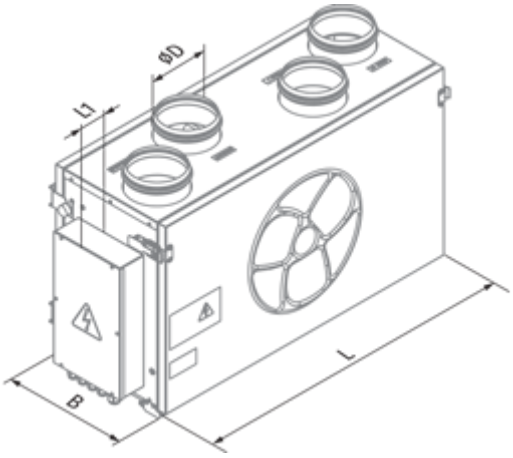

Ecodesign

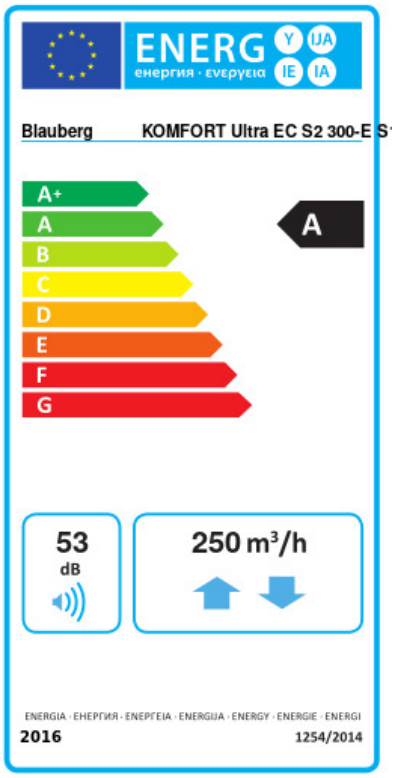

Trademark	Blauberg					
Model	KOMFORT Ultra EC S2 300-E S14 white					
Specific energy consumption (SEC) (kWh/(m²/a))	Cold		Average		Warm	
	-68.9	A+	-35.7	A	-14.1	E
Type of ventilation unit	Bidirectional					
Type of drive installed	Variable speed					
Type of heat recovery system	Recuperative					
Thermal efficiency of heat recovery (%)	58					
Maximum flow rate (m³/h)	250					
Electric power input (W)	150					
Reference flow rate (m³/s)	0.044					
Reference pressure difference (Pa)	50					
Specific power input (SPI) (W/(m³/h))	0.313					
Control typology	Local demand control					
Maximum internal leakage rates (%)	2.7					
Maximum external leakage rates (%)	2.7					
Declared typology	RVU BVU					
Sound power level (dB(A))	53					
The annual electricity consumption (AEC) (kWh/a)	Cold		Average		Warm	
	747		210		165	
The annual heating saved (AHS) (kWh/a)	Cold		Average		Warm	
	7885		4031		1823	

Accessories

CO2 sensors

Name	Photo	Description
CD-1		CO2 sensors
CD-2		CO2 sensors

Humidity sensors

Name	Photo	Description
FS2		Humidity sensor

Other accessories

Name	Photo	Description
FP 240x184x40 F8		F8 filter
FP 240x184x40 G4		G4 panel filter
SB C4 200/240		

Electric actuators

Name	Photo	Description
Belimo TF230		Electric actuators