

KOMFORT Ultra S 250-E S1 white

Compact heat recovery air handling units

- Heat exchanger type: Cross flow
- Heat exchanger material: Enthalpy
- Sound-insulated casing
- Enthalpy heat exchanger
- Control: Speed controller
- Casing material: Double-skinned white painted metal panels

	Unit of measurement	KOMFORT Ultra S 250-E S1 white
Phases	-	1
Minimum supply voltage	V	230
Maximum supply voltage	V	230
Power supply frequency	Hz	50/60
Maximum airflow	m³/h	250
Heat recovery efficiency, max	%	73
Heat exchanger type	-	Cross flow
Heat exchanger material	-	Enthalpy
Weight	kg	25
Transported air temperature (max)	°C	40
Transported air temperature (min)	°C	-25
Ambient air temperature min	°C	1
Ambient air temperature max	°C	40
Ingress protection rating	-	IP22
Ambient air humidity max	%	80
Ingress protection rating of the drive	-	IP44

Dimensions

D	B	H	H1	L	L1
125	300	443	490	713	43

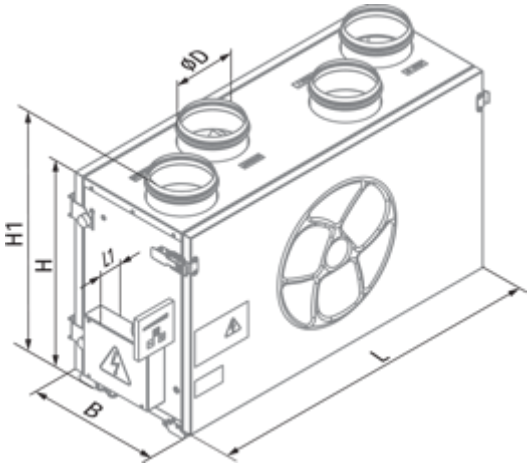

Accessories

Other accessories

Name	Photo	Description
FP 240x184x40 F8		F8 filter
FP 240x184x40 G4		G4 panel filter
SB C4 200/240		