

KZ 160

Clamps for round ducts

- Casing material: Galvanized steel

	Unit of measurement	KZ 160
Weight	kg	0.358

Dimensions

ØD	H
160	232

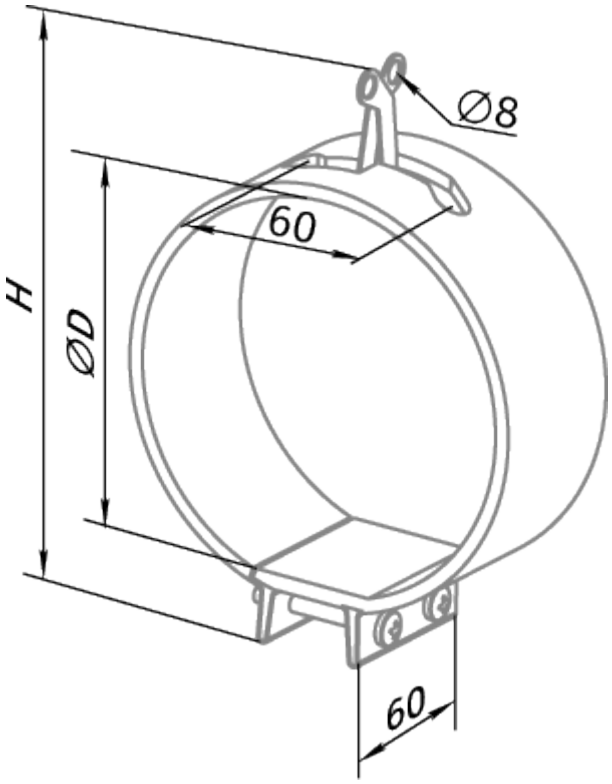
Ø8
60
H
ØD
60