


# Reneo-Fit D 100 L S14

Suspended heat and energy recovery air handling units

- Heat exchanger type: Counter flow
- Heat exchanger material: Polystyrene
- Sound-insulated casing
- Control: Wired control panel
- Casing material: EPP
- Humidity sensor: Optional
- CO2 sensor: Optional

| | Unit of measurement | Reneo-Fit D 100 L S14 |
|---|---|---|
| Phases | - | 1 |
| Minimum supply voltage | V | 230 |
| Maximum supply voltage | V | 230 |
| Power supply frequency | Hz | 50/60 |
| Maximum airflow | $m^3/h$ | 130 |
| Heat recovery efficiency, max | % | 94 |
| Heat exchanger type | - | Counter flow |
| Heat exchanger material | - | Polystyrene |
| Weight | kg | 8 |
| Transported air temperature (max) | °C | 40 |
| Transported air temperature (min) | °C | -23 |
| Ambient air temperature min | °C | 1 |
| Ambient air temperature max | °C | 40 |
| Ingress protection rating | - | IP22 |
| Ambient air humidity max | % | 60 |
| Ingress protection rating of the drive | - | IP44 |

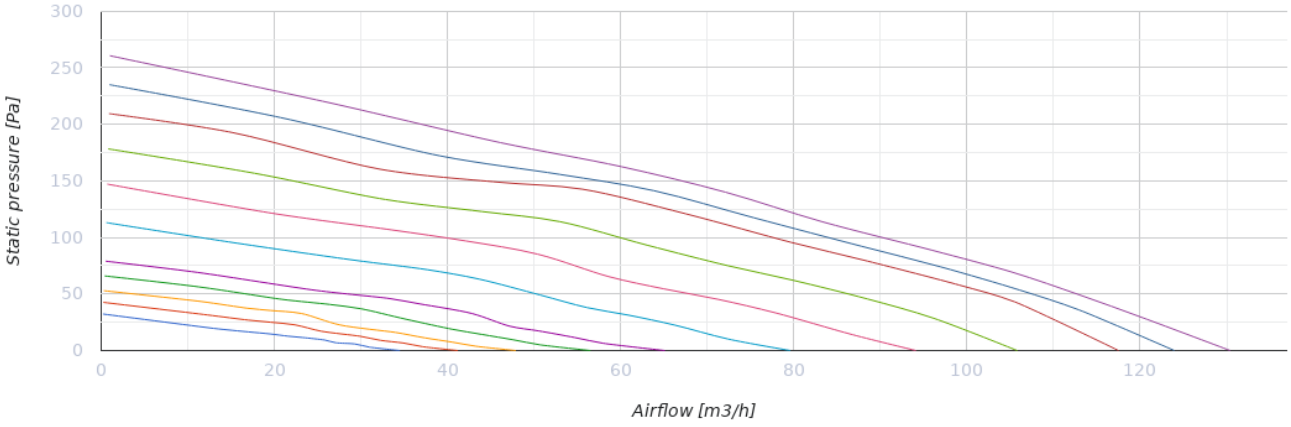


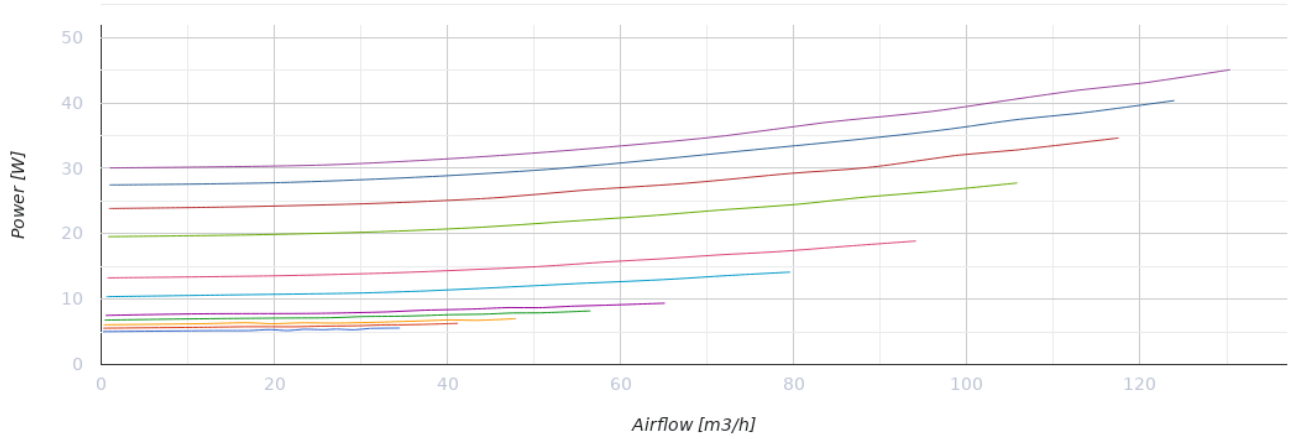


## Dimensions

| H | L | L1 | W | W1 |
|---|---|---|---|---|
| 242 | 530 | 630 | 520 | 600 |

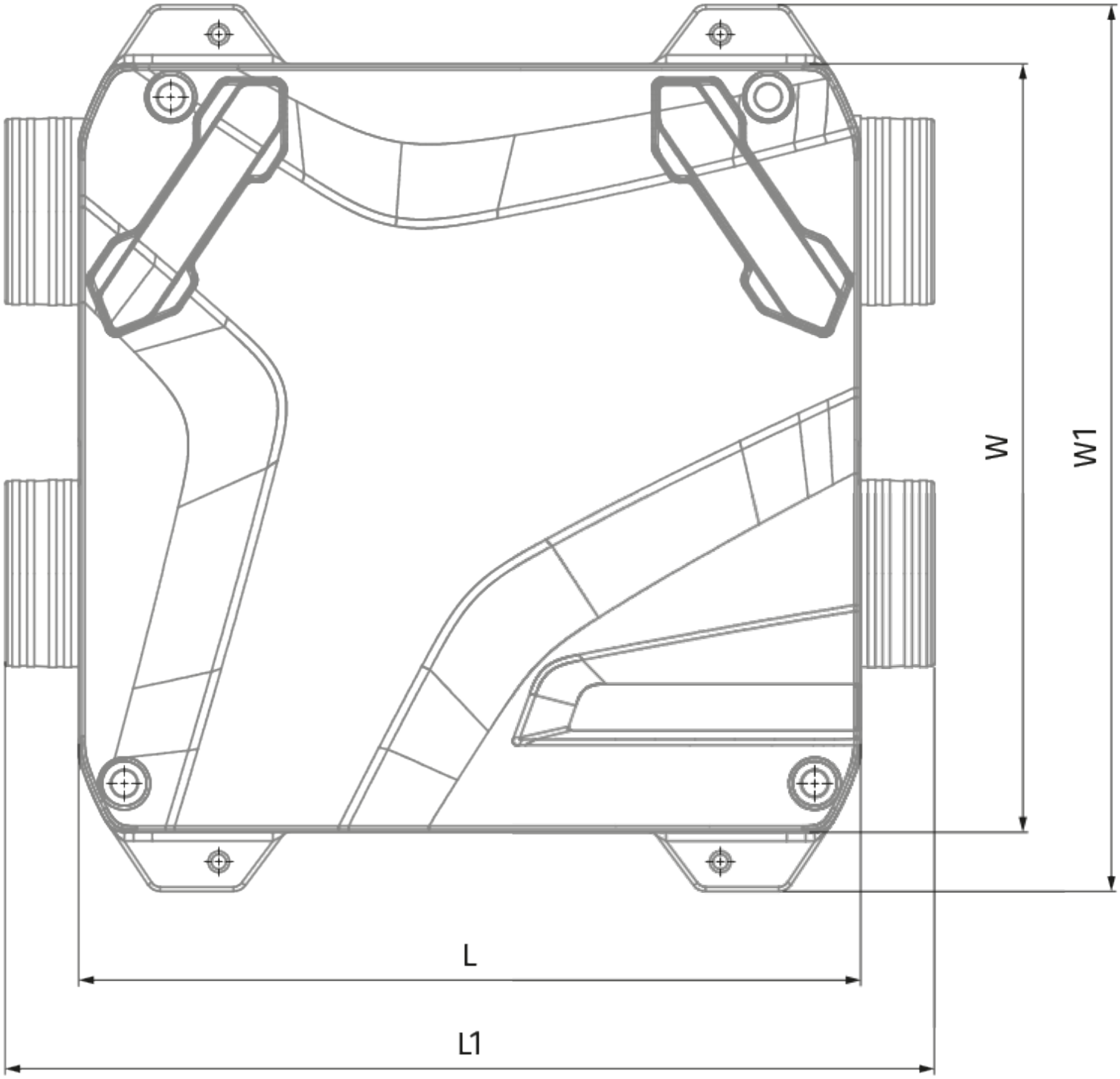
W
W1
L
L1

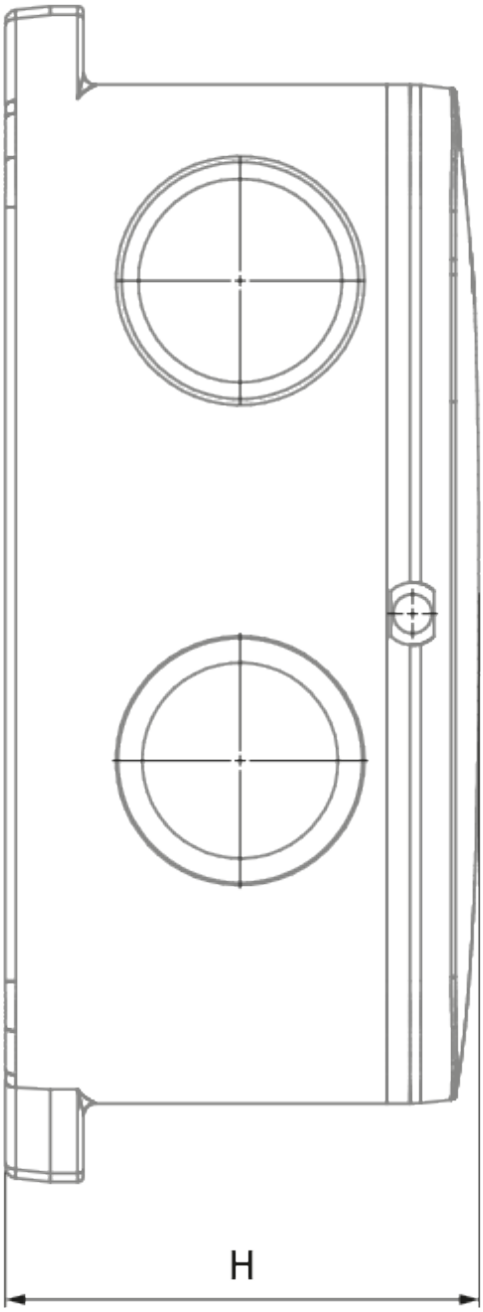
H

## Ecodesign

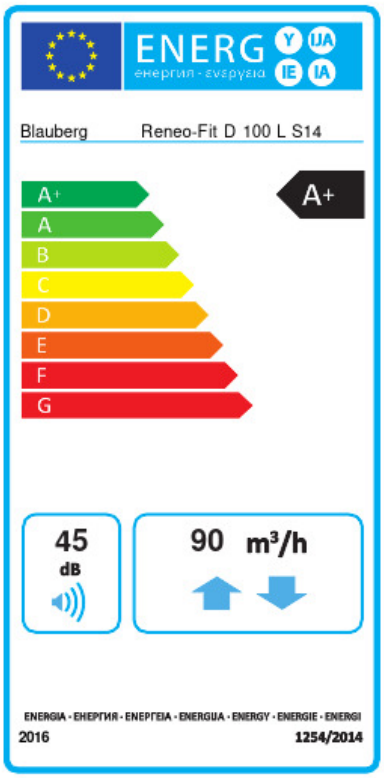


| Trademark | Blauberg | | | | | |
|---|---|---|---|---|---|---|
| Model | Reneo-Fit D 100 L S14 | | | | | |
| Specific energy consumption (SEC) (kWh/(m²/a)) | Cold | | Average | | Warm | |
| | -81 | A+ | -42.3 | A+ | -17.5 | E |
| Type of ventilation unit | Bidirectional | | | | | |
| Type of drive installed | Variable speed | | | | | |
| Type of heat recovery system | Recuperative | | | | | |
| Thermal efficiency of heat recovery (%) | 86 | | | | | |
| Maximum flow rate (m³/h) | 90 | | | | | |
| Electric power input (W) | 37 | | | | | |
| Reference flow rate (m³/s) | 0.018 | | | | | |
| Reference pressure difference (Pa) | 50 | | | | | |
| Specific power input (SPI) (W/(m³/h)) | 0.254 | | | | | |
| Control typology | Local demand control | | | | | |
| Maximum internal leakage rates (%) | 2.8 | | | | | |
| Maximum external leakage rates (%) | 3 | | | | | |
| Declared typology | RVU BVU | | | | | |
| Sound power level (dB(A)) | 45 | | | | | |
| The annual electricity consumption (AEC) (kWh/a) | Cold | | Average | | Warm | |
| | 716 | | 179 | | 134 | |
| The annual heating saved (AHS) (kWh/a) | Cold | | Average | | Warm | |
| | 9019 | | 4610 | | 2085 | |

## Accessories

### Condensation drainage

| Name | Photo | Description |
|---|---|---|
| SFK 20x32 |  | Hydraulic syphon for condensate drainage |

### CO2 sensors

| Name | Photo | Description |
|---|---|---|

| | | |
|---|---|---|
| CD-1 |  | CO2 sensors |
| CD-2 |  | CO2 sensors |

### Humidity sensors

| Name | Photo | Description |
|---|---|---|
| FS2 |  | Humidity sensor |

### Other accessories

| Name | Photo | Description |
|---|---|---|
| FP 176x150x22 F7 |  | F7 panel filter |
| FP 176x150x22 G4 |  | G4 panel filter |

### Electric actuators

| Name | Photo | Description |
|---|---|---|
| Belimo TF230 |  | Electric actuators |