


# Reneo-Fit D 100 R S21

Suspended heat and energy recovery air handling units

- Heat exchanger type: Counter flow
- Heat exchanger material: Polystyrene
- Sound-insulated casing
- Reheater: Optional
- Preheater: Optional
- BMS protocol: ModBus
- Control: Smartphone
- Casing material: EPP
- Humidity sensor: Optional
- CO2 sensor: Optional
- PM2.5 sensor: Optional

| | Unit of measurement | Reneo-Fit D 100 R S21 |
|---|---|---|
| Phases | - | 1 |
| Minimum supply voltage | V | 230 |
| Maximum supply voltage | V | 230 |
| Power supply frequency | Hz | 50/60 |
| Maximum airflow | m³/h | 130 |
| Heat recovery efficiency, max | % | 94 |
| Heat exchanger type | - | Counter flow |
| Heat exchanger material | - | Polystyrene |
| Weight | kg | 8 |
| Transported air temperature (max) | °C | 40 |
| Transported air temperature (min) | °C | -23 |
| Ambient air temperature min | °C | 1 |
| Ambient air temperature max | °C | 40 |
| Ingress protection rating | - | IP22 |
| Ingress protection rating of the drive | - | IP44 |
| Ambient air humidity max | % | 60 |

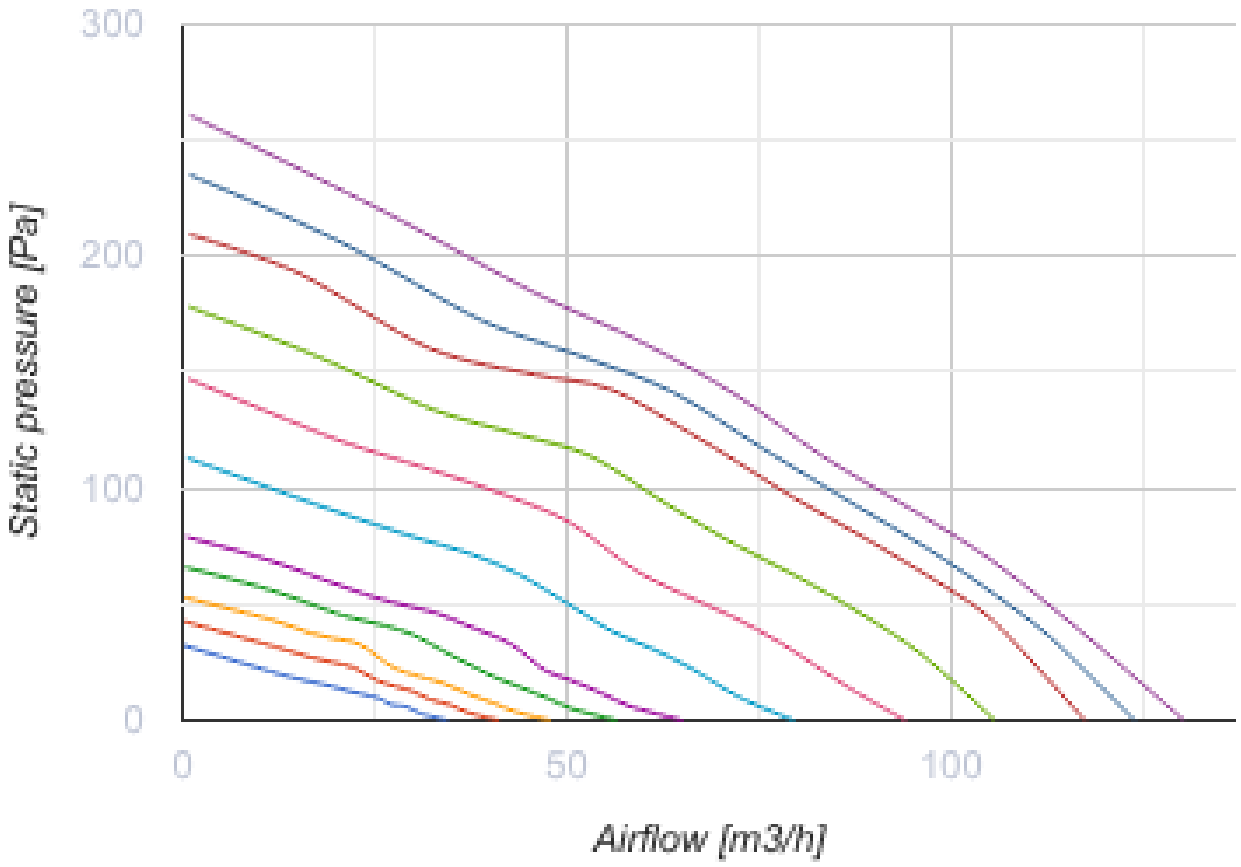
300
200
100
0
Static pressure [Pa]
0
50
100
Airflow [m3/h]

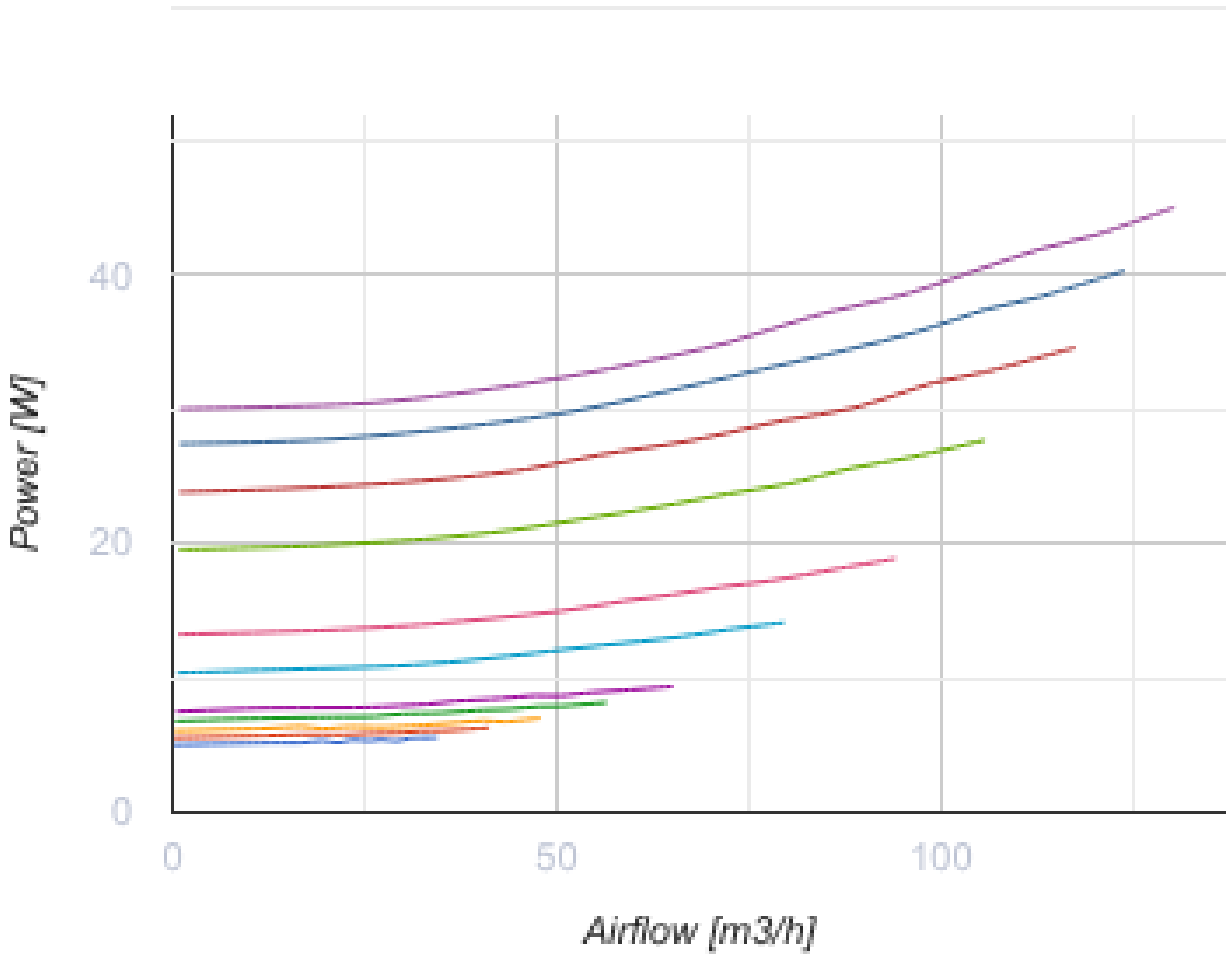


## Dimensions

| H | L | L1 | W | W1 |
|---|---|---|---|---|
| 242 | 530 | 630 | 520 | 600 |

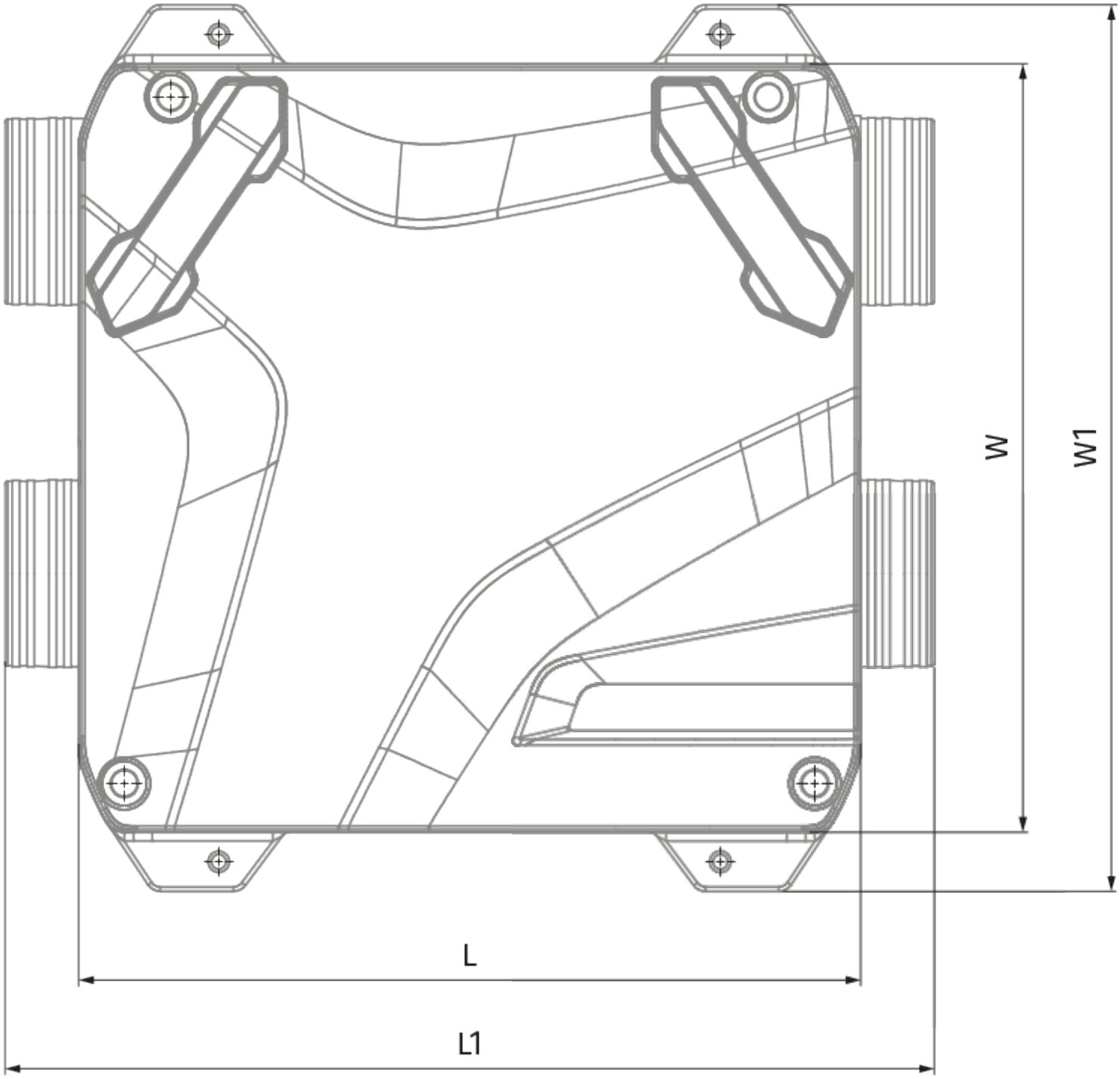
W
W1
L
L1

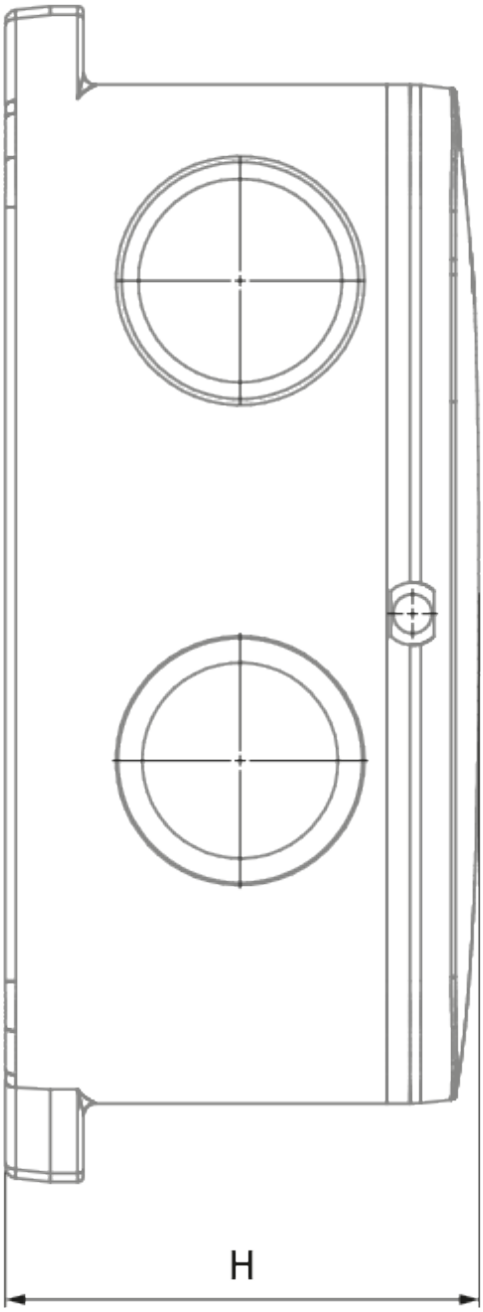
H

## Ecodesign

| | | | | | | |
|---|---|---|---|---|---|---|
| Trademark | Blauberg | | | | | |
| Model | Reneo-Fit D 100 R S21 | | | | | |
| Specific energy consumption (SEC) (kWh/(m²/a)) | Cold | | Average | | Warm | |
| | -81 | A+ | -42.3 | A+ | -17.5 | E |
| Type of ventilation unit | Bidirectional | | | | | |
| Type of drive installed | Variable speed | | | | | |
| Type of heat recovery system | Recuperative | | | | | |
| Thermal efficiency of heat recovery (%) | 86 | | | | | |
| Maximum flow rate (m³/h) | 90 | | | | | |
| Electric power input (W) | 37 | | | | | |
| Reference flow rate (m³/s) | 0.018 | | | | | |
| Reference pressure difference (Pa) | 50 | | | | | |
| Specific power input (SPI) (W/(m³/h)) | 0.254 | | | | | |
| Control typology | Local demand control | | | | | |
| Maximum internal leakage rates (%) | 2.8 | | | | | |
| Maximum external leakage rates (%) | 3 | | | | | |
| Sound power level (dB(A)) | 45 | | | | | |
| Declared typology | RVU BVU | | | | | |
| The annual electricity consumption (AEC) (kWh/a) | Cold | | Average | | Warm | |
| | 716.4 | | 179.4 | | 134.4 | |
| The annual heating saved (AHS) (kWh/a) | Cold | | Average | | Warm | |
| | 9019 | | 4610 | | 2085 | |

## Accessories

### Condensation drainage

| Name | Photo | Description |
|---|---|---|
| SFK 20x32 |  | Hydraulic syphon for condensate drainage |

### Electrical heaters

| Name | Photo | Description |
|---|---|---|

| | | |
|---|---|---|
| EVH 125-0.6-1 S21 V.2 |  | Electric duct preheater for heat exchanger freeze protection |
| EVH 125-0.8-1 S21 V.2 |  | Electric duct preheater for heat exchanger freeze protection |
| EVH 125-1.2-1 S21 V.2 |  | Electric duct preheater for heat exchanger freeze protection |

### Control Panels

| Name | Photo | Description |
|---|---|---|
| S25 |  | LCD control panel |
| S22 |  | Control panels |
| S22 Wi-Fi |  | Control panels |

### CO2 sensors

| Name | Photo | Description |
|---|---|---|
| CD-1 |  | CO2 sensors |
| CD-2 |  | CO2 sensors |

### Humidity sensors

| Name | Photo | Description |
|---|---|---|
| FS2 |  | Humidity sensor |

### Other accessories

| Name | Photo | Description |
|---|---|---|

| | | |
|---|---|---|
| FP 176x150x22 F7 |  | F7 panel filter |
| FP 176x150x22 G4 |  | G4 panel filter |

### Electric actuators

| Name | Photo | Description |
|---|---|---|
| Belimo TF230 |  | Electric actuators |