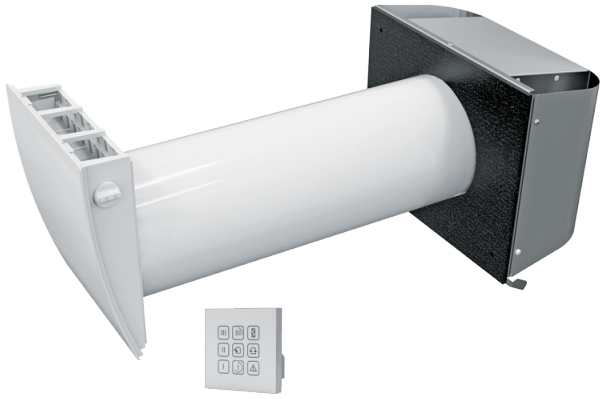

Vento Eco A50 C1 L035 S Pro

Heat recovery single-room units

- Air flow in heat recovery mode: 25
- Sound pressure level LpA at 1 m: 29
- Heat exchanger type: Regenerative
- Heat exchanger material: Ceramic
- Enthalpy heat exchanger
- Control: Wired control panel
- Casing material: Plastic

	Unit of measurement	Vento Eco A50 C1 L035 S Pro		
Minimum supply voltage	V	100		
Maximum supply voltage	V	240		
Power supply frequency	Hz	50/60		
Air flow in ventilation mode	m³/h	15	30	50
Air flow in heat recovery mode	m³/h	8	15	25
Sound pressure level LpA at 1 m	dB(A)	21	27	29
Heat recovery efficiency, max	%	88		
Heat exchanger type	-	Regenerative		
Heat exchanger material	-	Ceramic		
Transported air temperature (max)	°C	40		
Transported air temperature (min)	°C	-20		
Ingress protection rating	-	IP24		

Dimensions

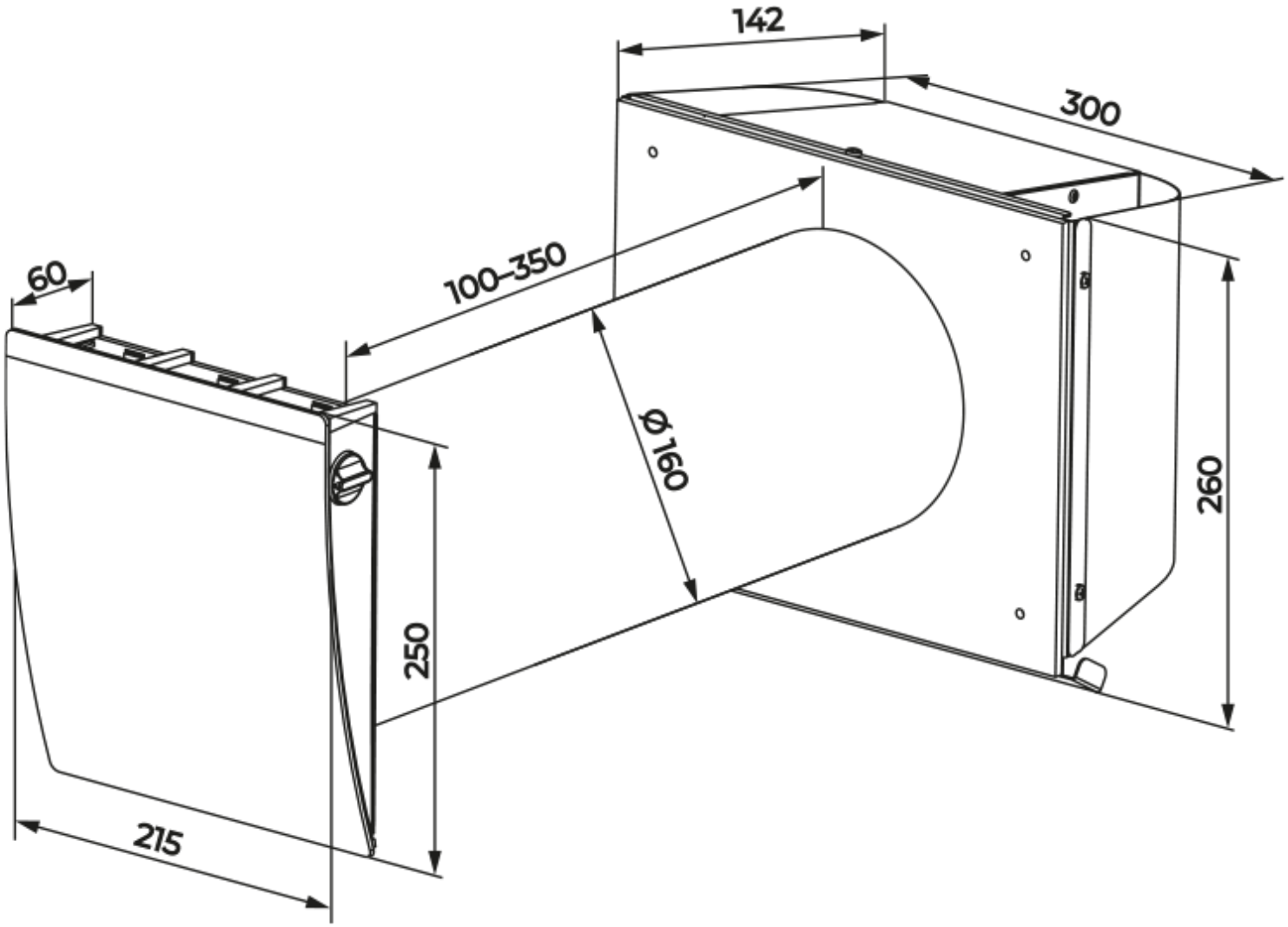
142
300
60
100–350
Ø 160
260
250
215

Ecodesign

Trademark	Blauberg					
Model	Vento Eco A50 C1 L035 S Pro					
Specific energy consumption (SEC) (kWh/(m²/a))	Cold		Average		Warm	
	-75.8	A+	-36.5	A	-14.1	E
Type of ventilation unit	Bidirectional					
Type of drive installed	3-speed					
Type of heat recovery system	Regenerative					
Thermal efficiency of heat recovery (%)	76					
Maximum flow rate (m³/h)	25					
Electric power input (W)	4.3					
Reference flow rate (m³/s)	0.004					
Specific power input (SPI) (W/(m³/h))	0.14					
Control typology	Clock control					
Airflow sensitivity at +20 Pa and -20 Pa (%)	0.26					
Declared typology	RVU BVU					
Sound power level (dB(A))	38					
The annual electricity consumption (AEC) (kWh/a)	Cold		Average		Warm	
	179		179		179	

Accessories

Other accessories

Name	Photo	Description
R 160-500		Air duct 160 mm and polystyrene foam plug
R 160-700	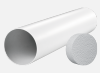	Air duct 160 mm and polystyrene foam plug
ZL1 Vento 160/150		
FP2 Vento G3		G3 filter kit (2 pcs.)

Hoods

Name	Photo	Description
AH-S chrome 160		Stainless steel ventilation hood
AH-S white 160		Stainless steel ventilation hood

Plastic

Name	Photo	Description
KIT BlauPlast white 160		Kit for angular mounting (for walls with standard thickness)
KIT BlauPlast chrome 160		Kit for angular mounting (for walls with standard thickness)

Cooker Hoods

Name	Photo	Description
Completion Kit Vento Eco A50-4		Indoor grille and cartridge with heat regenerator, fan and G3 filters

Electrical accessories for industrial units

Name	Photo	Description
SE Vento Eco A50 Pro		Sensor control panel