

VENTO Expert A50-1 L Pro

Heat recovery single-room units

- Air flow in heat recovery mode: 25
- Sound pressure level LpA at 1 m: 30
- Heat exchanger material: Ceramic
- Sound-insulated casing
- Enthalpy heat exchanger
- Control: Remote Control
- Shutters

	Unit of measurement	VENTO Expert A50-1 L Pro		
Maximum supply voltage	V	230		
Minimum supply voltage	V	100		
Power supply frequency	Hz	50/60		
Air flow in ventilation mode	m³/h	15	30	50
Air flow in heat recovery mode	m³/h	8	15	25
Sound pressure level LpA at 1 m	dB(A)	20	27	30
Heat recovery efficiency, max	%	93		
Heat exchanger material	-	Ceramic		
Transported air temperature (max)	°C	40		
Transported air temperature (min)	°C	-20		
Ambient air temperature min	°C	1		
Ambient air temperature max	°C	40		
Ingress protection rating	-	IP24		
Ambient air humidity max	%	80		
Minimum wall thickness	mm	255		
Maximum wall thickness	mm	690		

Dimensions

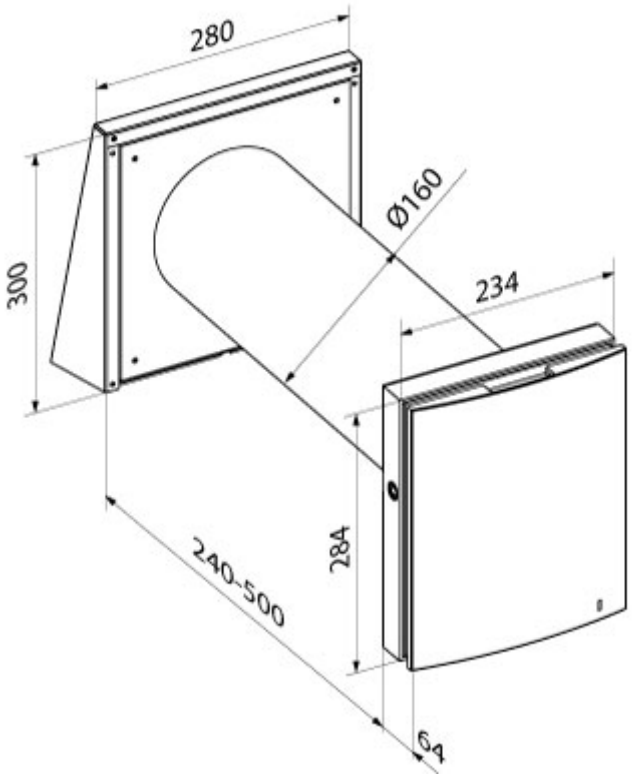
280
Ø160
234
300
284
240-500
64

Ecodesign

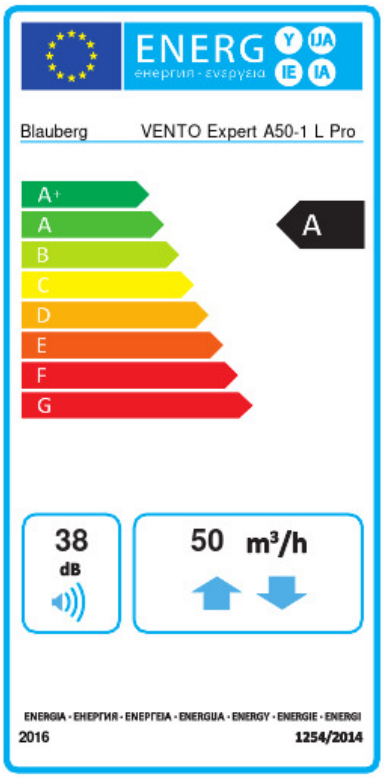

Trademark	Blauberg					
Model	VENTO Expert A50-1 L Pro					
Specific energy consumption (SEC) (kWh/(m²/a))	Cold		Average		Warm	
	-83.1	A+	-41.3	A	-17.3	E
Type of ventilation unit	Bidirectional					
Type of drive installed	3-speed					
Type of heat recovery system	Regenerative					
Thermal efficiency of heat recovery (%)	77					
Maximum flow rate (m³/h)	50					
Electric power input (W)	5.2					
Reference flow rate (m³/s)	0.004					
Specific power input (SPI) (W/(m³/h))	0.138					
Control typology	Local demand control					
Maximum internal leakage rates (%)	2.7					
Mixing rate (%)	1					
Airflow sensitivity at +20 Pa and -20 Pa (%)	0.4					
The indoor/outdoor air tightness (m³/h)	0.5					
Sound power level (dB(A))	38					
Declared typology	RVU BVU					
The annual electricity consumption (AEC) (kWh/a)	Cold		Average		Warm	
	100		100		100	
The annual heating saved (AHS) (kWh/a)	Cold		Average		Warm	
	86		44		20	

Accessories

CO2 sensors

Name	Photo	Description
CD-1		CO2 sensors
CD-2		CO2 sensors

Hoods

Name	Photo	Description
PP 160/0.5		The outer hood is designed to prevent the ingress of water and large objects into the ventilation equipment from outside

Plastic

Name	Photo	Description
KIT BlauPlast white 160		Kit for angular mounting (for walls with standard thickness)
KIT BlauPlast chrome 160		Kit for angular mounting (for walls with standard thickness)

Other accessories

Name	Photo	Description
FB Vento Expert A50		Remote control